EXPLODED VIEWS

Зип Общепит
vsezip.ru
+7(812)987-08-81

07-00 EXPLODED HIGH-P070E

Printing date: **27/04/2016**

Validity

From Serial Number: 0 /

To Serial Number: All untill printing date

Legend: **C** = Suggested spare parts

EXPLODED VIEWS

Зип Общепит
vsezip.ru
+7(812)987-08-81

This page intentionally left blank

07-00 EXPLODED HIGH P070E

Зип Общепит
vsezip.ru
+7(812)987-08-81

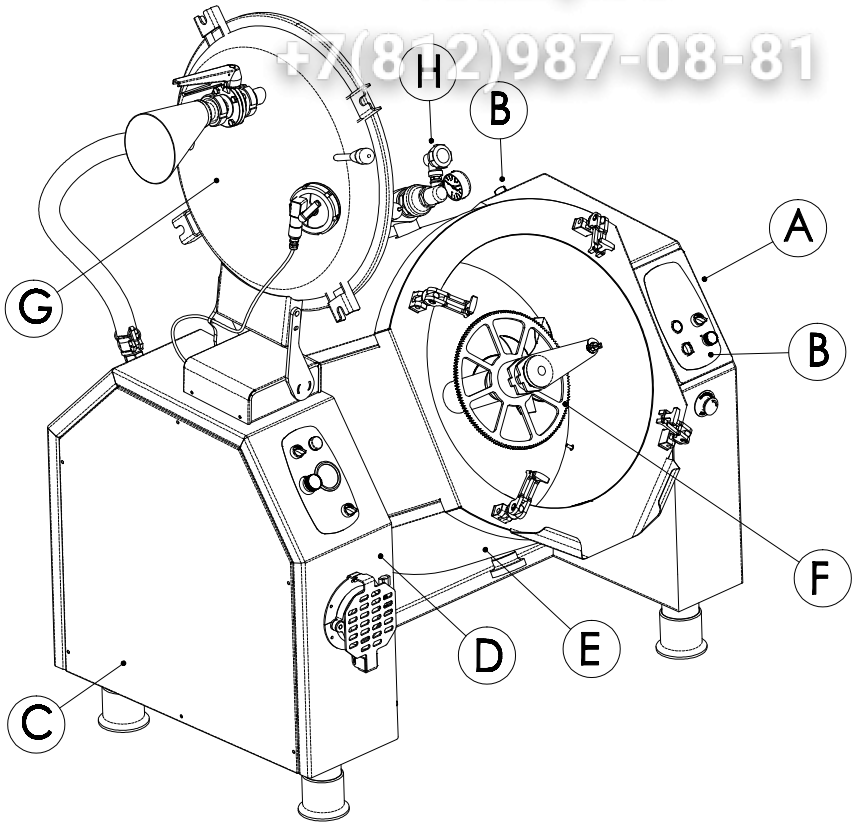

Pos.	Data sheet
A	05-2000
B	05-2010
C	05-2020 03-2000
C-D	05-2030
E	06-2000 04-2000
E-F	02-2000
F	02-2010 02-2020 02-2030 02-2040
G	03-2010
H	05-2050

ЗИП Общепит
vsezip.ru
+7(812)987-08-81

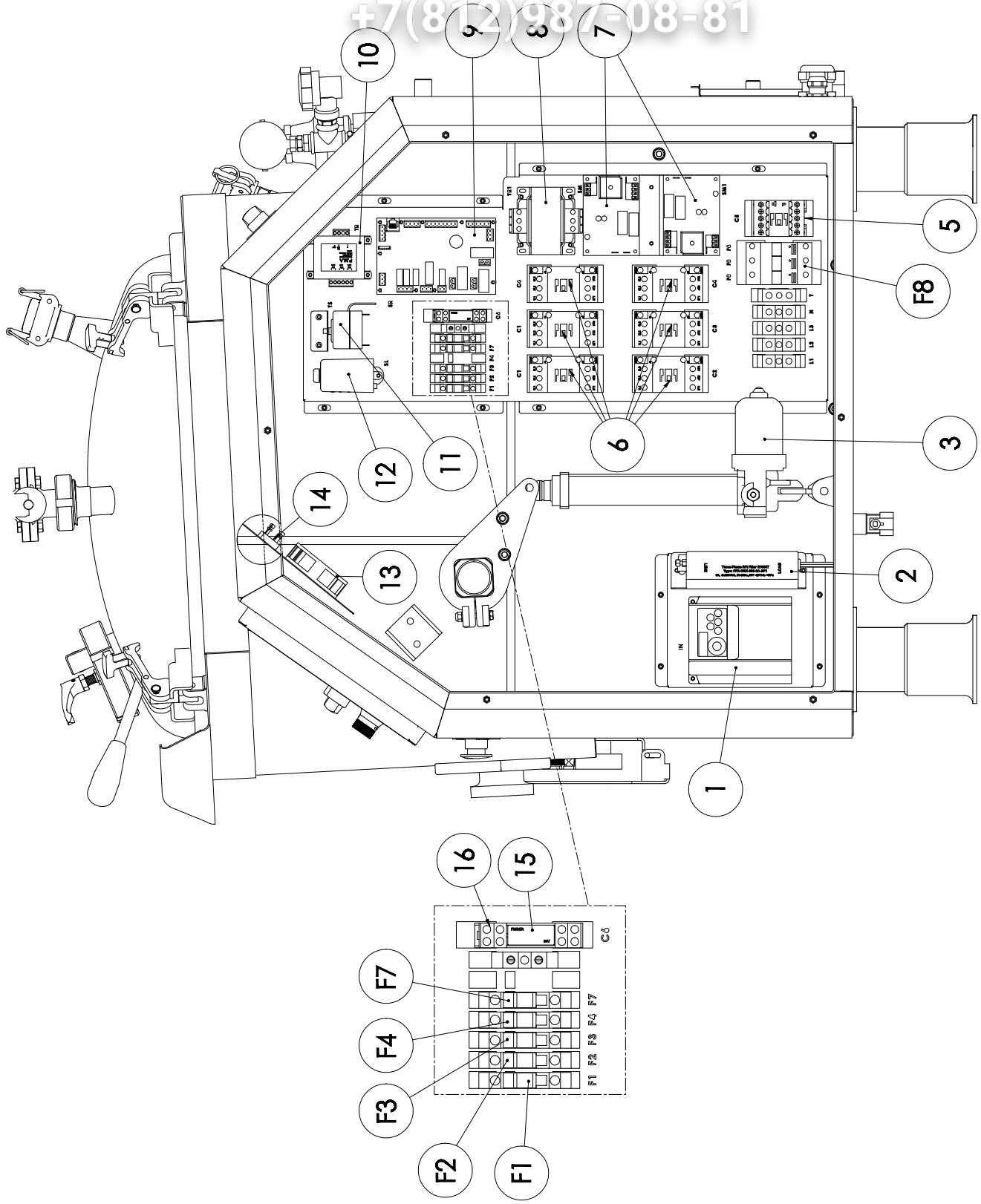

ЗИП Общепит
vsezip.ru
+7(812)987-08-81

Pos.	Model	UM	Qty	C	Model	Description	Price Eur
01		PZ	1,00		40700052	INVERTER TRIF. 0,75K FR-D740-022-EC	
02		PZ	1,00		40800062	FILTER INTERTER FFR-CSH-036-8A-RF1	
03		PZ	1,00		40300124	LINEAR ACTUATOR C.200 24V 9MM/S	
05		PZ	1,00	C	40100079	ELECTROMAGNETIC SWITCH 20A-230V/50H	
06		PZ	1,00	C	40100051	ELECTROMAGNETIC SWITCH 35A-230V/50H	
07		PZ	1,00		40700078	SCHEDA ALIMENT.+AZION.ATTUATORE 24V	
08		PZ	1,00		40200110	TRANSFORMER 75VA DRC700	
09		PZ	1,00	C	40700086	RELAY CARD MINI (DIX.)	
10		PZ	1,00		40200131	TRANSFORMER 24VA LCD CARD	
11		PZ	1,00	C	40100041	SAFETY THERMOSTAT 180°C 3F	
12		PZ	1,00	C	40800054	LEVEL CONTROL DEVICE	
13		PZ	1,00		40300031	VENTILATOR 80X25 24VCC BRUSHLESS	
14		PZ	1,00		40300046	DIODES BRIDGE 35A 1000V FASTOM	
15		PZ	1,00	C	40100057	RELAY 8A 2N0 24VAC	
16		PZ	1,00		40100055	RELAY SOCKET DIN RAIL X 40100054	
17	F1	PZ	1,00	C	40200050	RAPID FUSE 5X20 200MA F-250V	
18	F2	PZ	1,00	C	40200084	DELAYED FUSE 5X20 3,15A T-250V	
19	F3	PZ	1,00	C	40200080	DELAYED FUSE 5X20 500MA T-250V	
20	F4	PZ	1,00	C	40200080	DELAYED FUSE 5X20 500MA T-250V	
21	F7	PZ	1,00	C	40200053	RAPID FUSE 5X20 250MA F-250V	
22	F8	PZ	1,00	C	40200092	DELAYED FUSE 10,3X38 6A AM	

Вип Общепит
vsezip.ru
+7(812)987-08-81

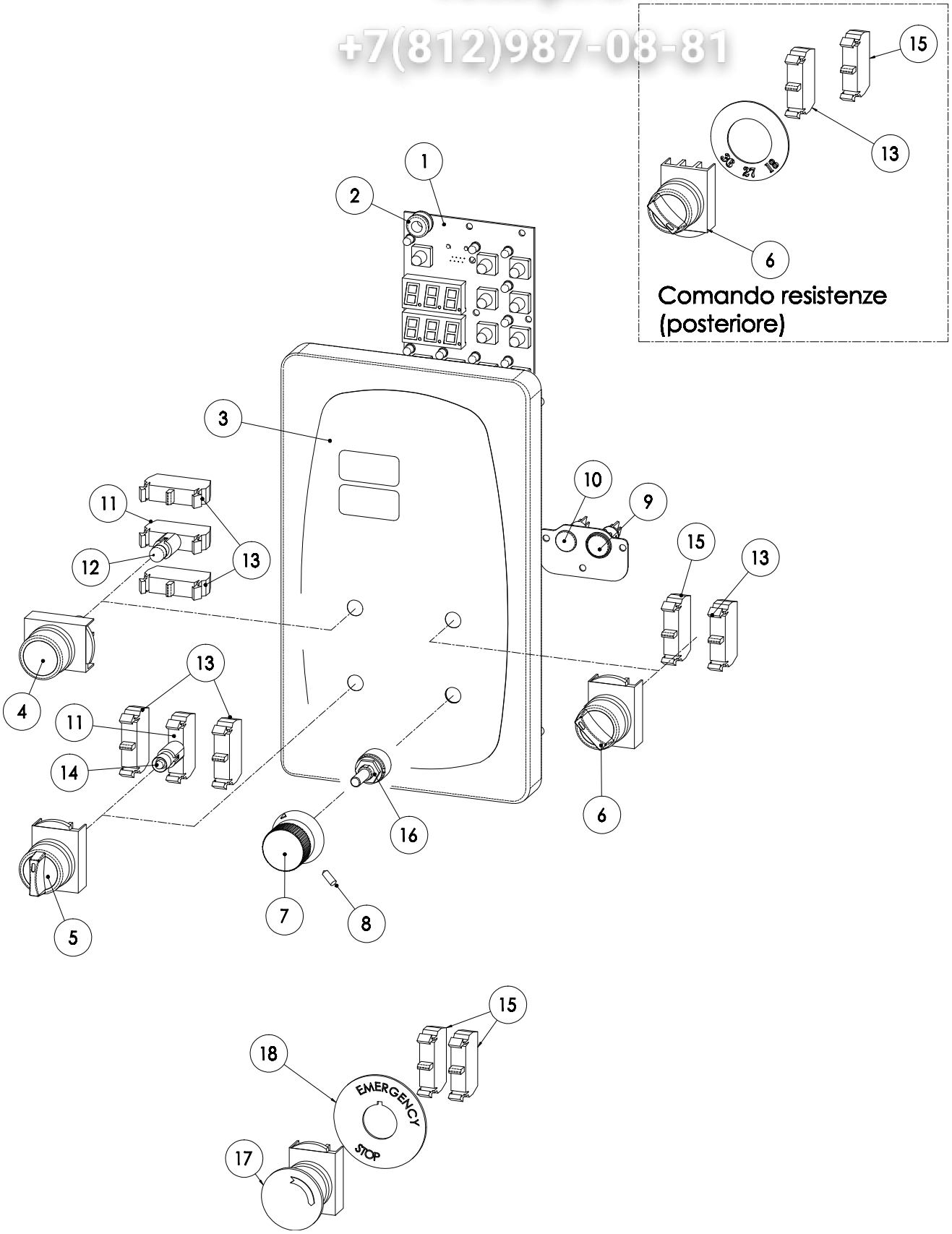

Вип Общепит
vsezip.ru
+7(812)987-08-81

Pos.	Model	UM	Qty	C	Model	Description	Price Eur
01		PZ	1,00	C	40700084	CARD KEYPAD MINI WITH 2 DISPLAY	
02		PZ	1,00		10600136	GROMMET D.7 N.7088	
03		PZ	1,00		40700400	STENCIL COMMANDS HIGH-P070	
04		PZ	1,00		40100086	ILLUMINATED PUSH-BUTTONS WHITE	
05		PZ	1,00		40100053	SELECTOR 3 POSITIONS WITH RETURNING	
06		PZ	1,00		40100002	SELECTOR BLACK KNOB 3 POSITIONS	
07		PZ	1,00		20200110	KNURLED KNOB D.27 H=25,5	
08		PZ	1,00		10100580	GRUB SCREW INOX M4X10 UNI5927	
09		PZ	1,00	C	40200192	ORANGE SIGNAL LED 2V D.12	
10		PZ	1,00	C	40200150	ORANGE SIGNAL 400V D.12	
11		PZ	1,00		40200090	POWER WARNING LIGHT GE	
12		PZ	1,00		40200067	GLASS LAMP 24V 2W	
13		PZ	1,00		40100112	GROUP CONTACTS 1NA	
14		PZ	1,00	C	40200066	GLASS LAMP 240V 3W	
15		PZ	1,00		40100110	GROUP CONTACTS 1NC	
16		PZ	1,00		40800060/1	POTENZIOMETER 1W/1K WITH CABLE	
17		PZ	1,00		40100100	EMERGENCY BOTTON D.40	
18		PZ	1,00		10600130	DATA PLATE "EMERGENCY-STOP"	

ЗИП Общепит
vsezip.ru
+7(812)987-08-81

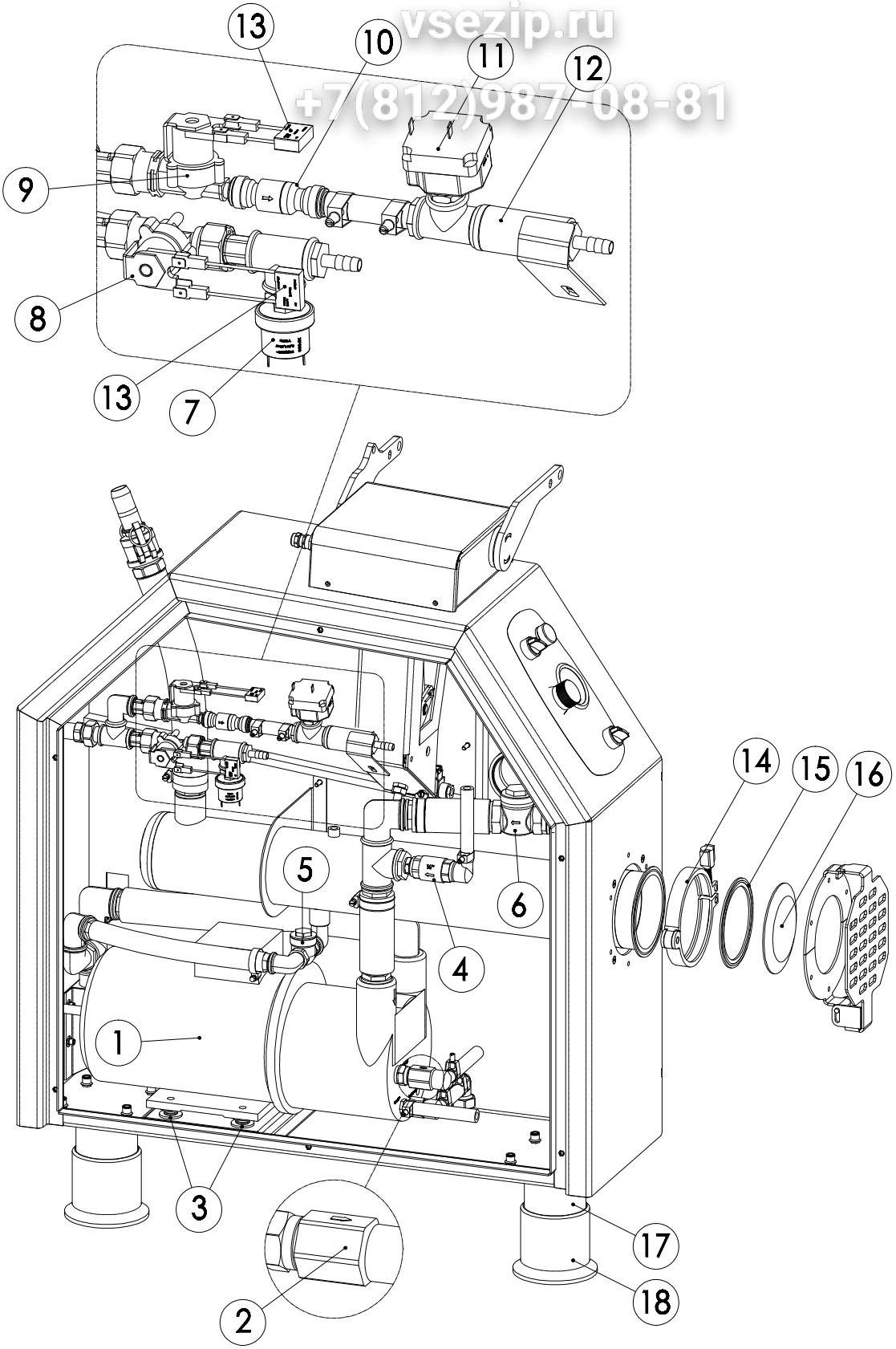

ЗиП Общепит
vsezip.ru
+7(812)987-08-81

Pos.	Model	UM	Qty	C	Model	Description	Price Eur
01		PZ	1,00		40300230	LIQUID RING PUMP RVS 400V-50HZ	
02		PZ	1,00		40300232	DRAIN VALVE VAL 1/2"	
03		PZ	1,00		10600134	GROMMET D.7 DK 7/14/18-3	
04		PZ	1,00		30200096	NO-RETURN VALVE 1/2" F/F	
05		PZ	1,00		30200120	VALVE "CLAPET" 1/2" F/F	
06		PZ	1,00		30200122	VALVE "CLAPET" 1" F/F	
07		PZ	1,00	C	30300051	PRESSURE SWITCH 0,6 BAR N.C. 1/8" F	
08		PZ	1,00	C	30100076	H2O 3/4" PLASTIC SOLENOID VALVE	
09		PZ	1,00	C	30100070	SOLENOID VALVE WATER 1 WAY 230/50HZ	
10		PZ	1,00		10400242	NO-RETURN VALVE FOR PIPE D.10	
11		PZ	1,00	C	30300052/1	PRESSURE SWITCH 2,0 BAR N.C. 1/8" F	
12		PZ	1,00		30300036	MAGNETIC AGAINST-CALCAREUS DEVICE	
13		PZ	1,00		40100088	ARCH INTERFERENCE BLANKER 0,1MF(DF)	
14		PZ	1,00		10400314	CLAMP 2 SECTORS 4" AISI304	
15		PZ	1,00		10500076	SILICONE GASKET CLAMP 4"	
16		PZ	1,00		10400312	TAPPO CLAMP 4" A304	
17		PZ	1,00		SH0026-00	ASS.PIEDINO D.80 C/CONTRODADO	
18		PZ	1,00		SC1248-00	PVC COVERING FOR FOOT D.80	

Вип Общепит
vsezip.ru
+7(812)987-08-81

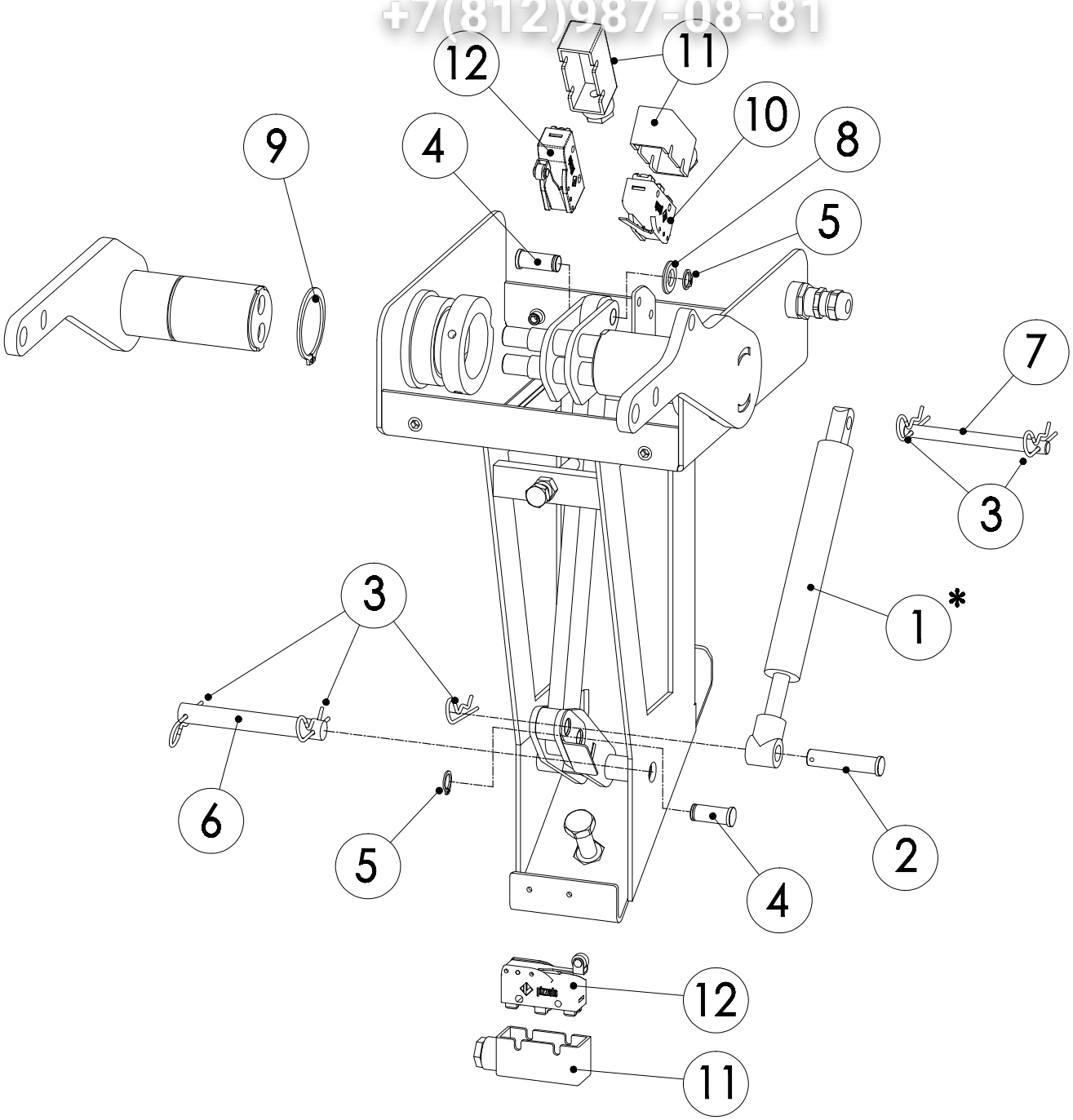

* ATTENZIONE : POS.1 fornire il nr.di matricola della macchina

* ATTENTION : POS.1 provide the serial number of the machine

Вип Общепит
vsezip.ru
+7(812)987 08 81

Pos.	Model	UM	Qty	C	Model	Description	Price Eur
01		PZ	1,00		20300...	GAS SPRING 2210.300. RF2-BS2	
02		PZ	1,00		SH0070-00	PERNO D.10 INF.MOLLA GAS HIGH-P070	
03		PZ	1,00		10300020	COTTER PINS "R" MM.2 ART.110	
04		PZ	1,00		SH0068-00	PERNO D.10 BIELLA COPERC.HIGH-P070	
05		PZ	1,00		10500000	INOX RING SHAFT D.10 UNI7435	
06		PZ	1,00		SC1132-00	TONDO D.12 X LEVA GUIDA MOLLA GAS	
07		PZ	1,00		SH0062-00	PERNO FISS.SUP.MOLLA GAS HIGH-P070	
08		PZ	1,00		10200240	PLANE WASHER A2 M10 UNI6592 DIN125	
09		PZ	1,00		10500040	INOX RING SHAFT D.40 UNI7435	
10		PZ	1,00	C	40100007	ROUND LIMIT SWITCH MS32	
11		PZ	1,00		10600150	BOOTLEG PG9 LIMIT-SWITCH	
12		PZ	1,00	C	40100010	ROUND LIMIT SWITCH MS42	

Вип Общепит
vsezip.ru
+7(812)987-08-81

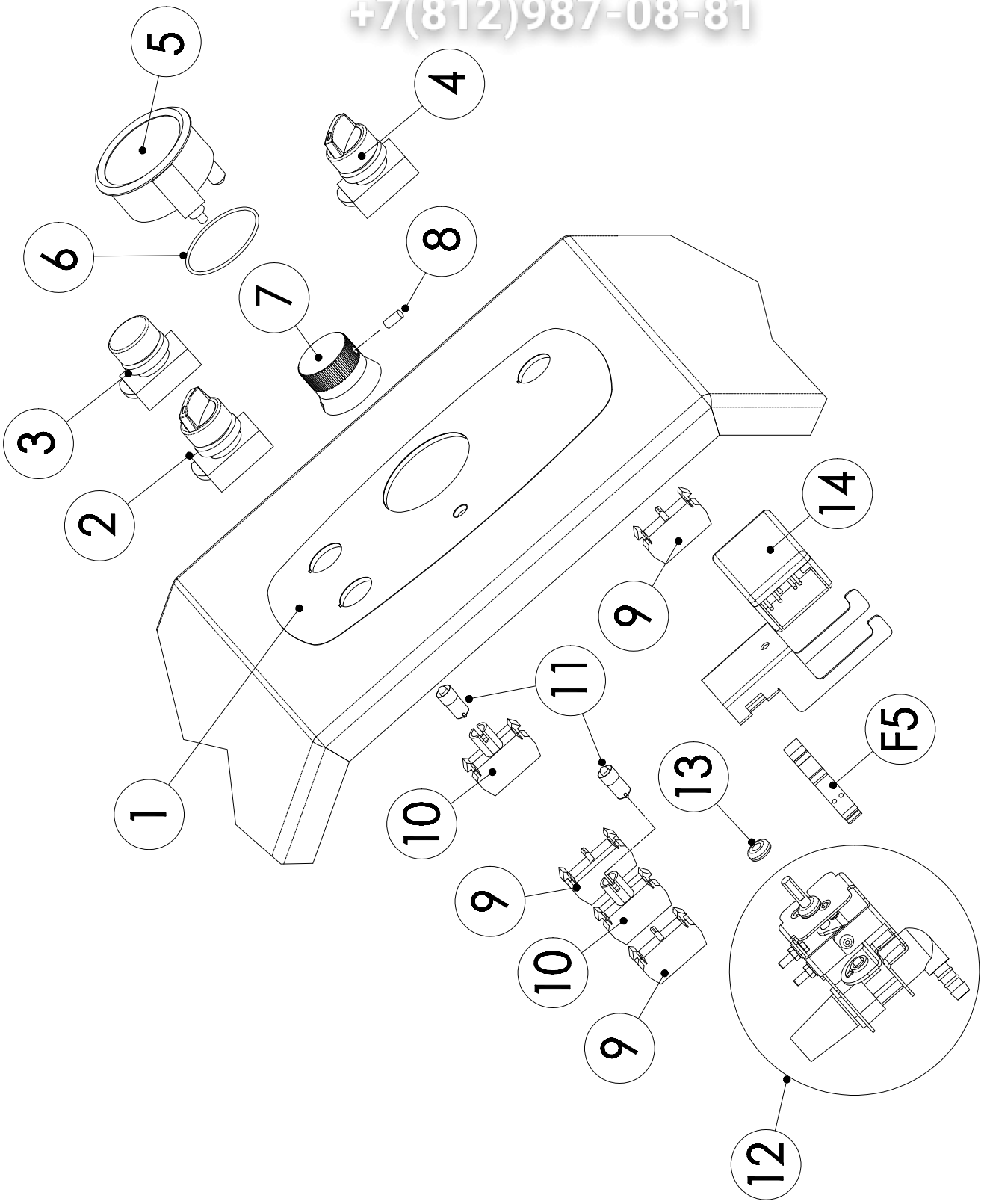

Вип Общепит
vsezip.ru
+7(812)987-08-81

Pos.	Model	UM	Qty	C	Model	Description	Price Eur
01		PZ	1,00		40700410	STENCIL GROUP VACUUM HIGH-P070	
02		PZ	1,00		40100021	SELECTOR WHITE KNOB 2 POSITIONS	
03		PZ	1,00		40200076	PILOT LIGHT RED GE	
04		PZ	1,00		40100021	SELECTOR BLACK KNOB 2 POSITIONS	
05		PZ	1,00		30300032	VACUUM GAUGE 0/-1 BAR D.60	
06		PZ	1,00		10500122	O-RING DI.47,35X1,78 RIF.2187 SIL.	
07		PZ	1,00		20200112	KNURLED KNOB D.34 H=29,5	
08		PZ	1,00		10100490	GRUB SCREW INOX M5X10 UNI5927	
09		PZ	1,00		40100112	GROUP CONTACTS 1NA	
10		PZ	1,00		40200090	POWER WARNING LIGHT GE	
11		PZ	1,00	C	40200066	GLASS LAMP 240V 3W	
12		PZ	1,00		GRP02-0062	VACUUM REGULATION VALVE HIGHP-070	
13		PZ	1,00		10600146	GROMMET D.6 N.68	
14		PZ	1,00	C	40200202	TRANSFORMER LED 230VAC 10-15VDC	
15	F5	PZ	1,00	C	40200080	DELAYED FUSE 5X20 500MA T-250V	

ЗИП Общепит
wsezip.ru
+7(812)987-08-81

VISTA POSTERIORE
REAR VIEW

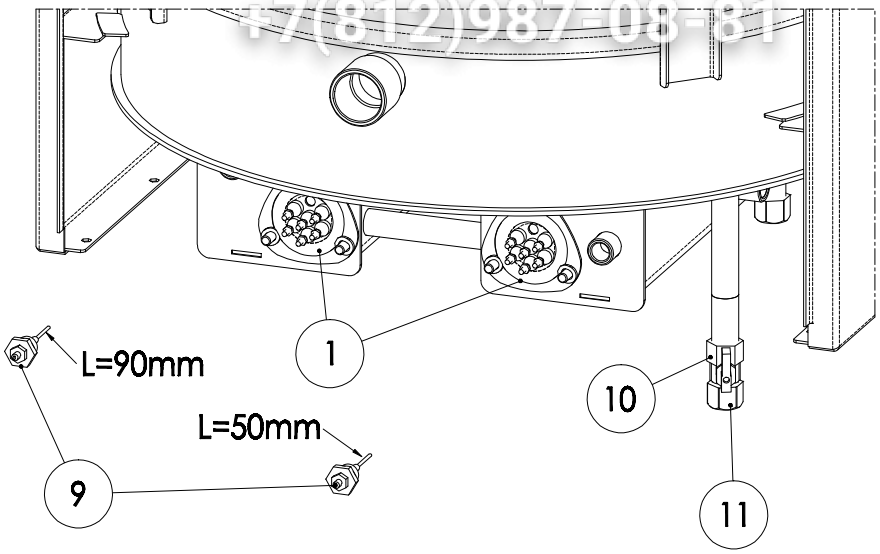

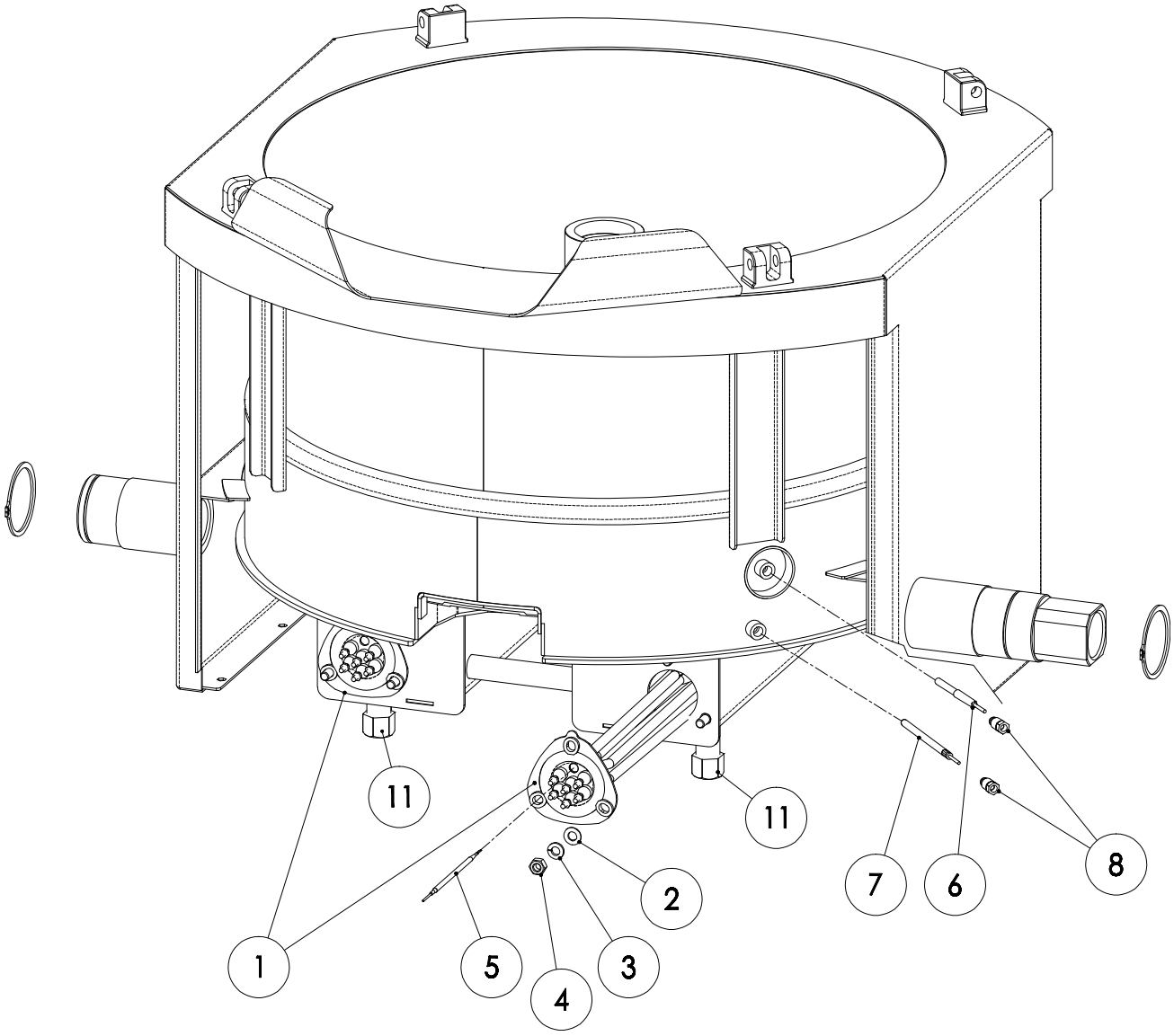

ЗИП Общепит
vsezip.ru
+7(812)987-08-81

Pos.	Model	UM	Qty	C	Model	Description	Price Eur
01	400V	PZ	1,00	C	40400042	HEATING ELEMENT FOR PAN 9KW 230V	
01	440V	PZ	1,00	C	40400043	RES.TRIF.PENTOLA 9KW 254V A=420	
01	460-480V	PZ	1,00	C	40400047	RES.TRIF.PENTOLA 9KW 277V A=420	
02		PZ	1,00		10200230	PLANE WASHER A2 M8 UNI6592 DIN125	
03		PZ	1,00		10200259	ROND. GROWER A2 M8 UNI1751	
04		PZ	1,00		10200210	NUT INOX A2 M8 UNI5588	
05		PZ	1,00	C	40100041	SAFETY THERMOSTAT 180°C 3F	
06		PZ	1,00	C	40800046	PROBE TCK D.6X50 FOR PROBE CBT	
07		PZ	1,00	C	40800044	PROBE TCK D.6X100 PRODUCT PROBE PR	
08		PZ	1,00		30100088	BICONE + PILOT CONNECTION D.6MM	
09		PZ	1,00		40800040	LEVEL CONTROL ELECTRODE	
10		PZ	1,00		30200098	VALVE MINIBALL M/F 1/2"	
11		PZ	1,00		10400156	PLUG 1/2" F (STEEL)	

ЗИП Общепит
vsezip.ru
+7(812)987-08-81

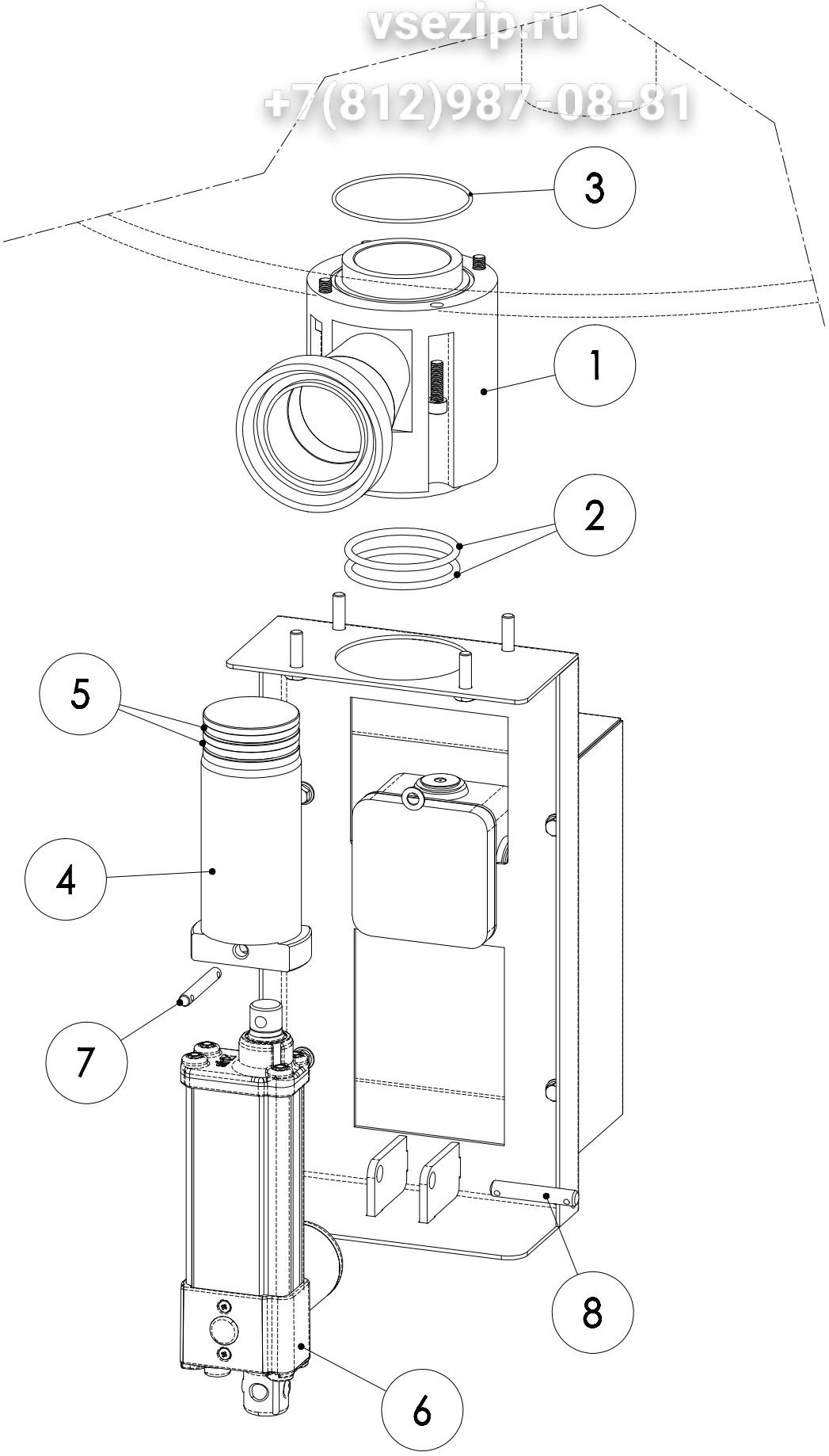

ЗиП Общепит
vsezip.ru
+7(812)987-08-81

Pos.	Model	UM	Qty	C	Model	Description	Price Eur
01		PZ	1,00		SH0150-00	VALVE BODY DISCHARGE HIGH-P070	
02		PZ	1,00		10500172	O-RING DI.50,39X3,53 R. 4200 EPDM	
03		PZ	1,00		10500174	O-RING DI.66,40X1,78 R. 2262 SILIC.	
04		PZ	1,00		SH0152-00	VALVE SHUTTER DISCHARGE HIGH-P070	
05		PZ	1,00		10500170	O-RING DI.40,87X3,53 R. 4162 EPDM	
06		PZ	1,00		40300116	LINEAR ACTUATOR C.100 24V 16MM/S	
07		PZ	1,00		SH0168-00	PERNO FISS.OTTURATORE D.6 HIGH-P	
08		PZ	1,00		SH0158-00	PERNO FISS.ATTUAT.VALV.SC.HIGH-P	

ЗИП Общепит
vsezip.ru
+7(812)987-08-81

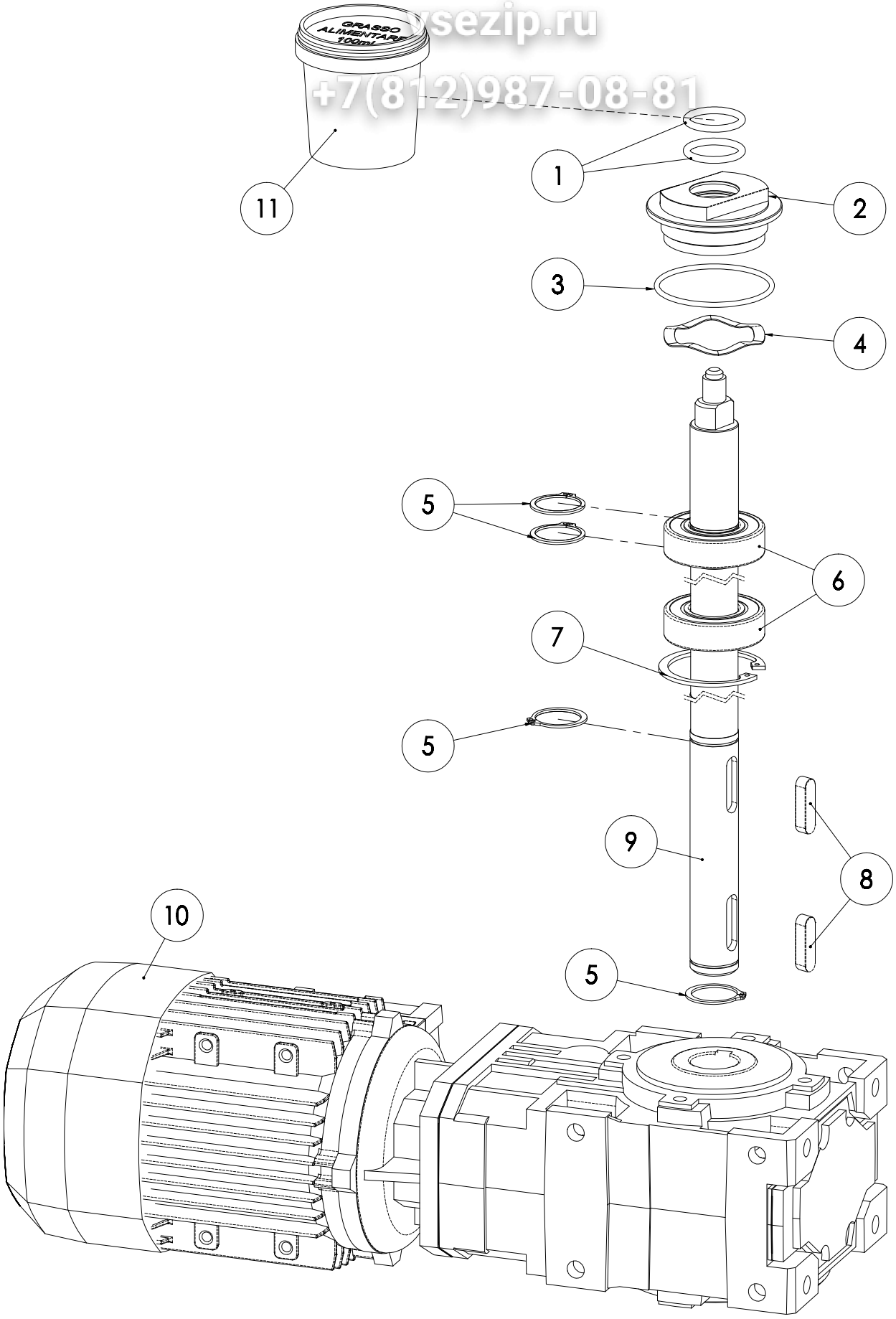

ЗИП Общепит
vsezip.ru
+7(812)987-08-81

Pos.	Model	UM	Qty	C	Model	Description	Price Eur
01		PZ	1,00	C	10500081	O-RING 24,99X3,53 R.2-214 E540-80	
02		PZ	1,00		SC1007-00	SUPPORT PLUG TRANSMIS.CBT.090/130TN	
03		PZ	1,00	C	10500134	O-RING DI.56,82X2,62 R.2-228 SILIC.	
04		PZ	1,00		20400044	WAV.RING LMKAS 52G D.52-41	
05		PZ	1,00		10500015	INOX RING SHAFT D.25 UNI7435	
06		PZ	1,00		20400031	RADIAL BEARING D.25 6205-2RS INOX	
07		PZ	1,00		10500052	RING FOR HOLES D.52 UNI7437	
08		PZ	1,00		10300073	PARALLEL KEY 8X7X30 A2 UNI6604/A	
09		PZ	1,00		SC1002-00A	DRIVE SHAFT CBGTG/E 090A	
10		PZ	1,00		40300142	MOTOR RED.12,6KGM A102 PR105/180	
11		PZ	1,00	C	70400172	CONF.100ML ALIMENTARY GREASE	

ЗИП Общепит
vsezip.ru
+7(812)987-08-81

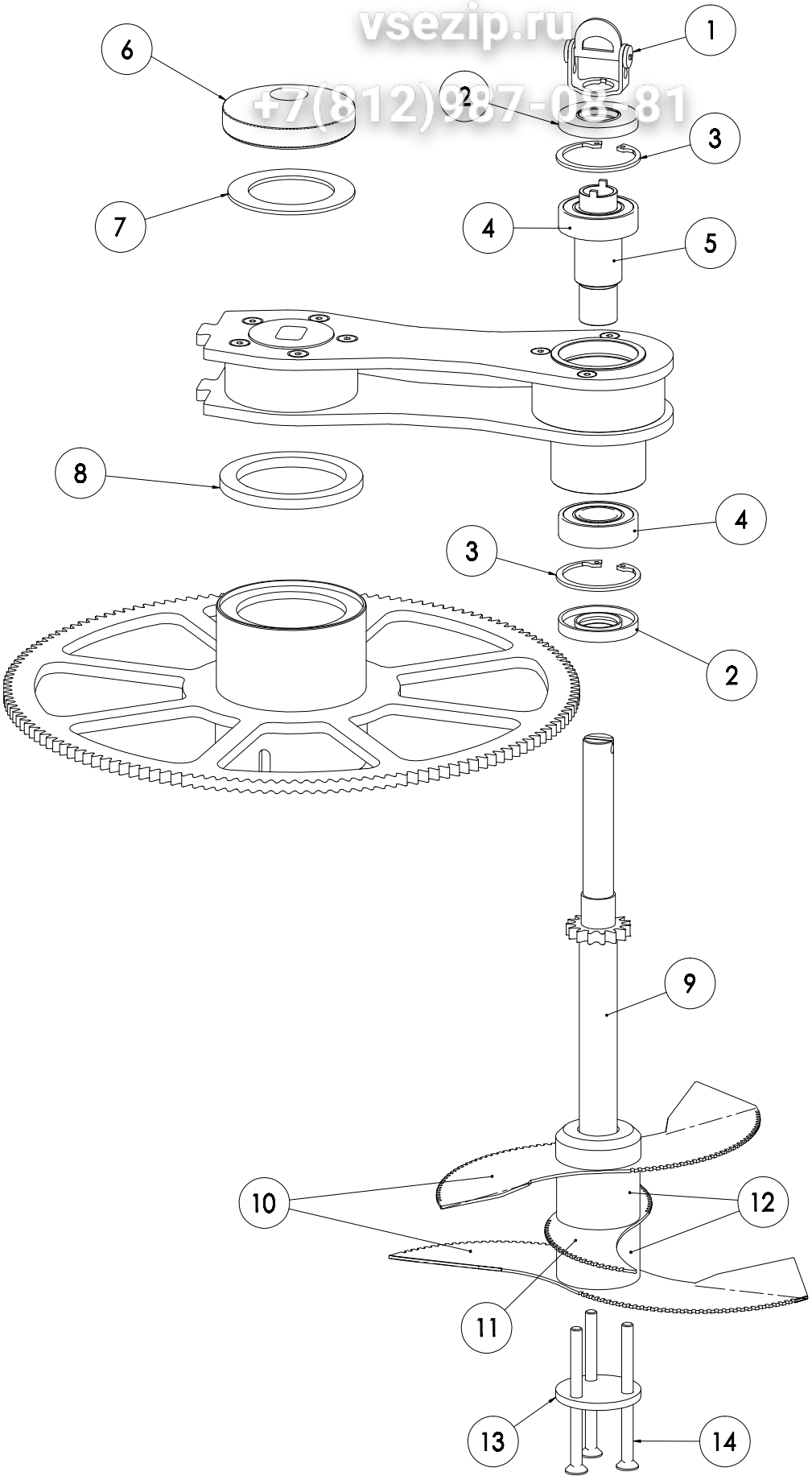

ЗиП Общепит
vsezip.ru
+7(812)987-08-81

Pos.	Model	UM	Qty	C	Model	Description	Price Eur
01		PZ	1,00		SH0268-00	RETAINER CUTTER SHAFT HIGH-P070	
02		PZ	1,00		10500140	SEAL RING 20X42X7 SC	
03		PZ	1,00		10500051	RING FOR HOLES D.42 UNI7437	
04		PZ	1,00		20400029	RADIAL BEARING D.20 H-6004-ZZ INOX	
05		PZ	1,00		SH0274-00	MOZZO ALBERO CUTTER HIGH-P070	
06		PZ	1,00		SC1000-00	KNURLED FERRUCLE CBTG/E090	
07		PZ	1,00		SH0262-00	RONDELLA TEFLON ANTIROTAZ.HIGH-P	
08		PZ	1,00		SH0252-00	TEFLON RING HIGH-P	
09		PZ	1,00		SH0266-00	CUTTER SHAFT HIGH-P070	
10		PZ	1,00		SH0280-00	TOOTHED KNIFE WING D.230	
11		PZ	1,00		SH0282-00	TOOTHED KNIFE D.180	
12		PZ	1,00		SH0278-00	SPACER TEFLON KNIFE HIGH-P	
13		PZ	1,00		SH0276-00	FIXING FLANGE KNIVES HIGH-P	
14		PZ	1,00		10100488	SCREW A2 M6X80 UNI5933	

ЗИП Общепит
vsezip.ru
+7(812)987-08-81

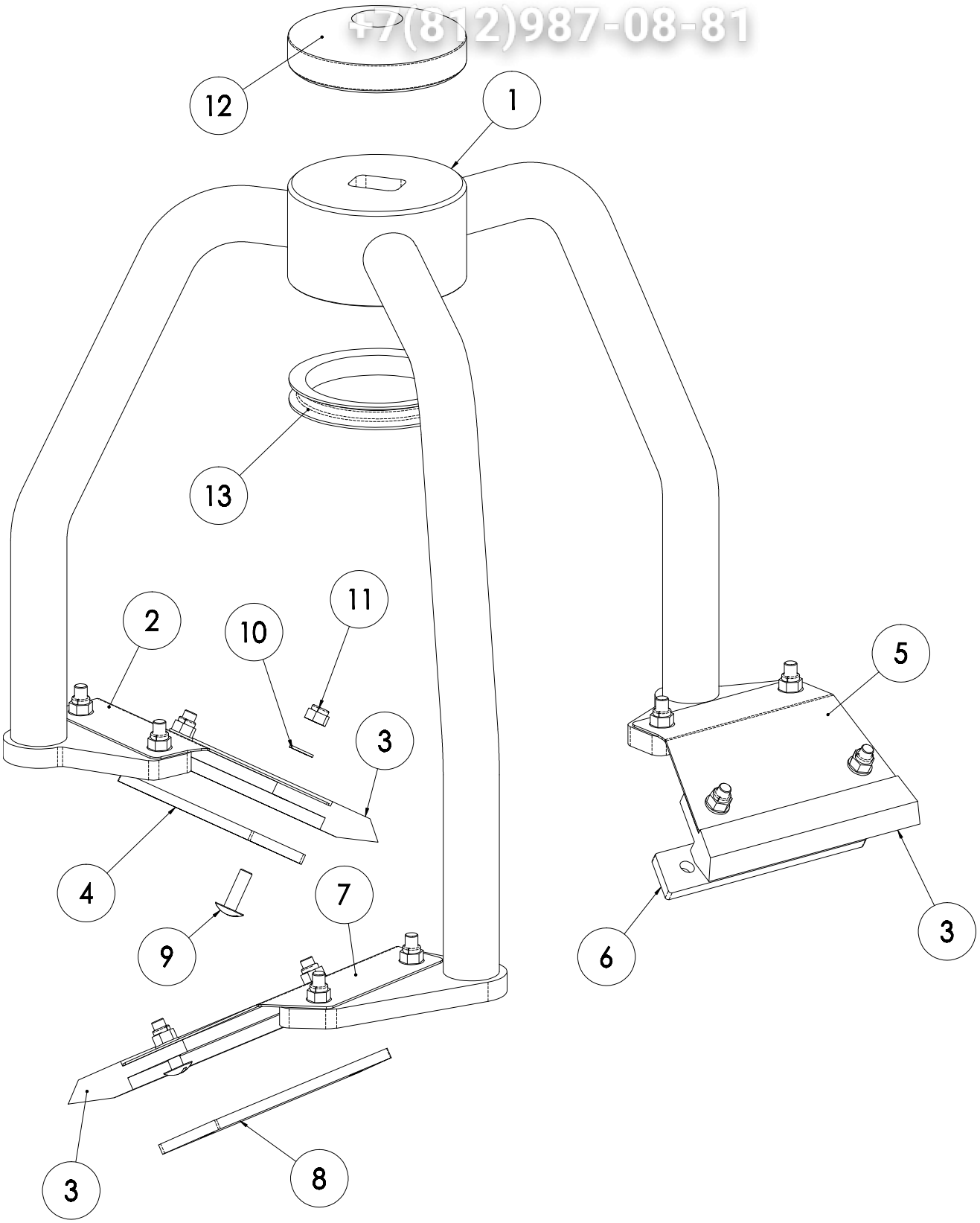

Бит Общепит
vsezip.ru
+7(812)987-08-81

Pos.	Model	UM	Qty	C	Model	Description	Price Eur
01		PZ	1,00		SH0300-00	MIXER HIGH-P070	
02		PZ	1,00		SC0482-00	STAINLESS STEEL SLICE (INT) CBT070	
03		MT	0,50	C	10600160	TEFLON SCRAPER CUCIMIX (500MM)	
04		PZ	1,00		SC0488-00	REINFORCEMENT SCRAPER INTER.CBT070	
05		PZ	1,00		SC0484-00	STAINLESS STEEL SLICE(CENTRAL)CBT70	
06		PZ	1,00		SC0490-00	REINFORCEMENT SCRAPER CENTRAL CBT70	
07		PZ	1,00		SC0486-00	STAINLESS STEEL SLICE (EXT) CBT070	
08		PZ	1,00		SC0492-00	REINFORCEMENT SCRAPER EXT CBT070	
09		PZ	1,00		10100002	SCREW POELIERS INOX M5X16	
10		PZ	1,00		10200105	PLANE WASHER A2 M5 UNI6592 DIN125	
11		PZ	1,00		10200143	NUT AEROTIGHT INOX A2 M5	
12		PZ	1,00		SC1000-00	KNURLED FERRUCLE CBTG/E090	
13		PZ	1,00		SC1005-00	TEFLON RING CBT.090/130 TN	

ЗИП Общепит
vsezip.ru
+7(812)987-08-81

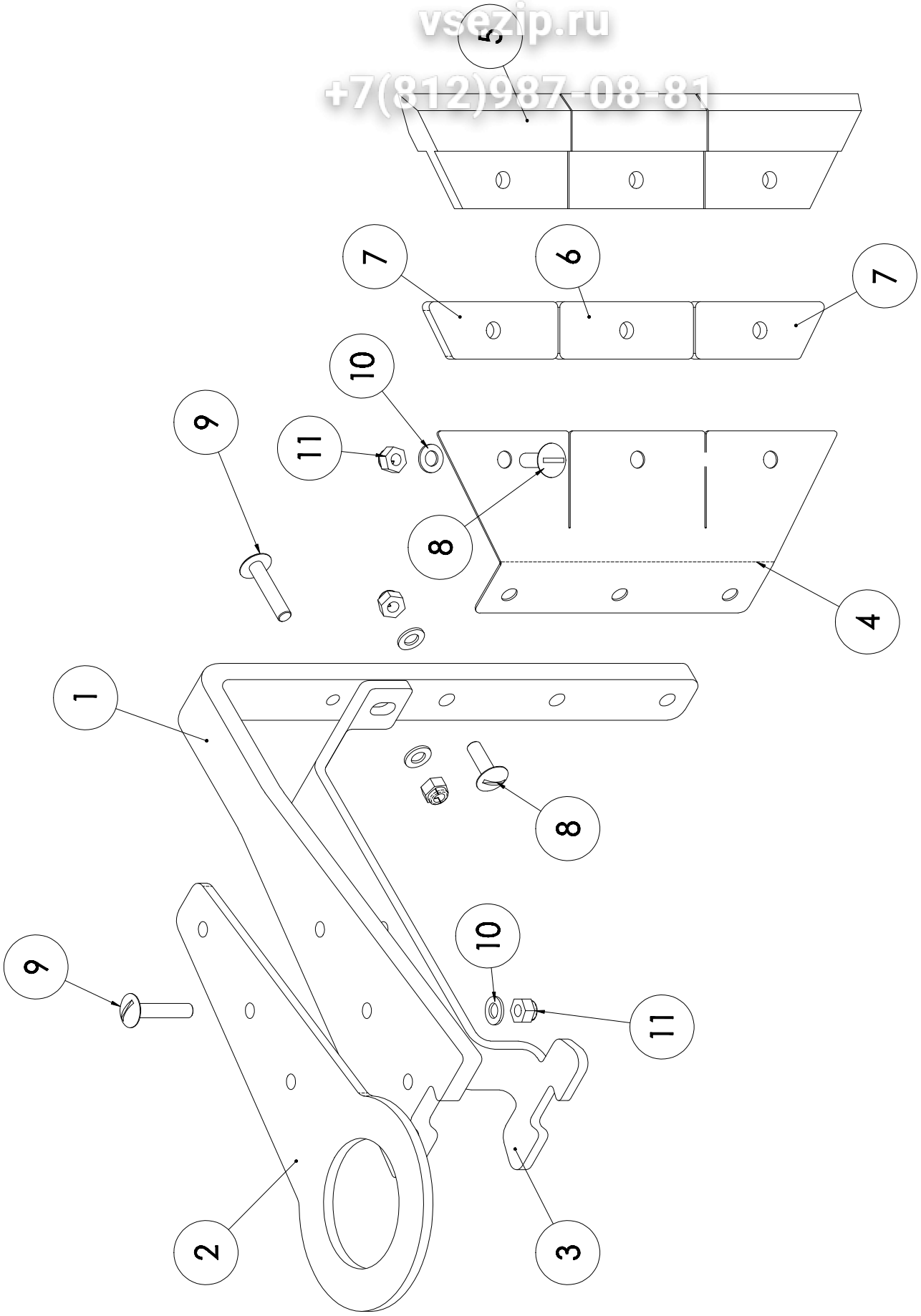

ВИП Общепит
vsezip.ru
+7(812)987-08-81

Pos.	Model	UM	Qty	C	Model	Description	Price Eur
01		PZ	1,00		SH0310-00	BRACCIO PALET.VERT.CUTTER HIGH-P070	
02		PZ	1,00		SH0314-00	RINF.SUP.PALET.VER.CUTTER HIGH-P070	
03		PZ	1,00		SH0312-00	RINF.INF.PALET.VER.CUTTER HIGH-P070	
04		PZ	1,00	C	SH0304-00	PALETTA VERT.ACCIAIO ARM.HIGH-P070	
05		MT	0,21	C	10600160	TEFLON SCRAPER CUCIMIX (500MM)	
06		PZ	1,00		SH0306-00	RINF.CENTR.RASCH.(VERT.)HIGH-P070	
07		PZ	1,00		SH0308-00	RINF.LATER.RASCH.(VERT.)HIGH-P070	
08		PZ	1,00		10100002	SCREW POELIERS INOX M5X16	
09		PZ	1,00		10100004	VITE POELIERS INOX M5X25	
10		PZ	1,00		10200105	PLANE WASHER A2 M5 UNI6592 DIN125	
11		PZ	1,00		10200143	NUT AEROTIGHT INOX A2 M5	

ЗИП Общепит
vsezip.ru
+7(812)987-08-81

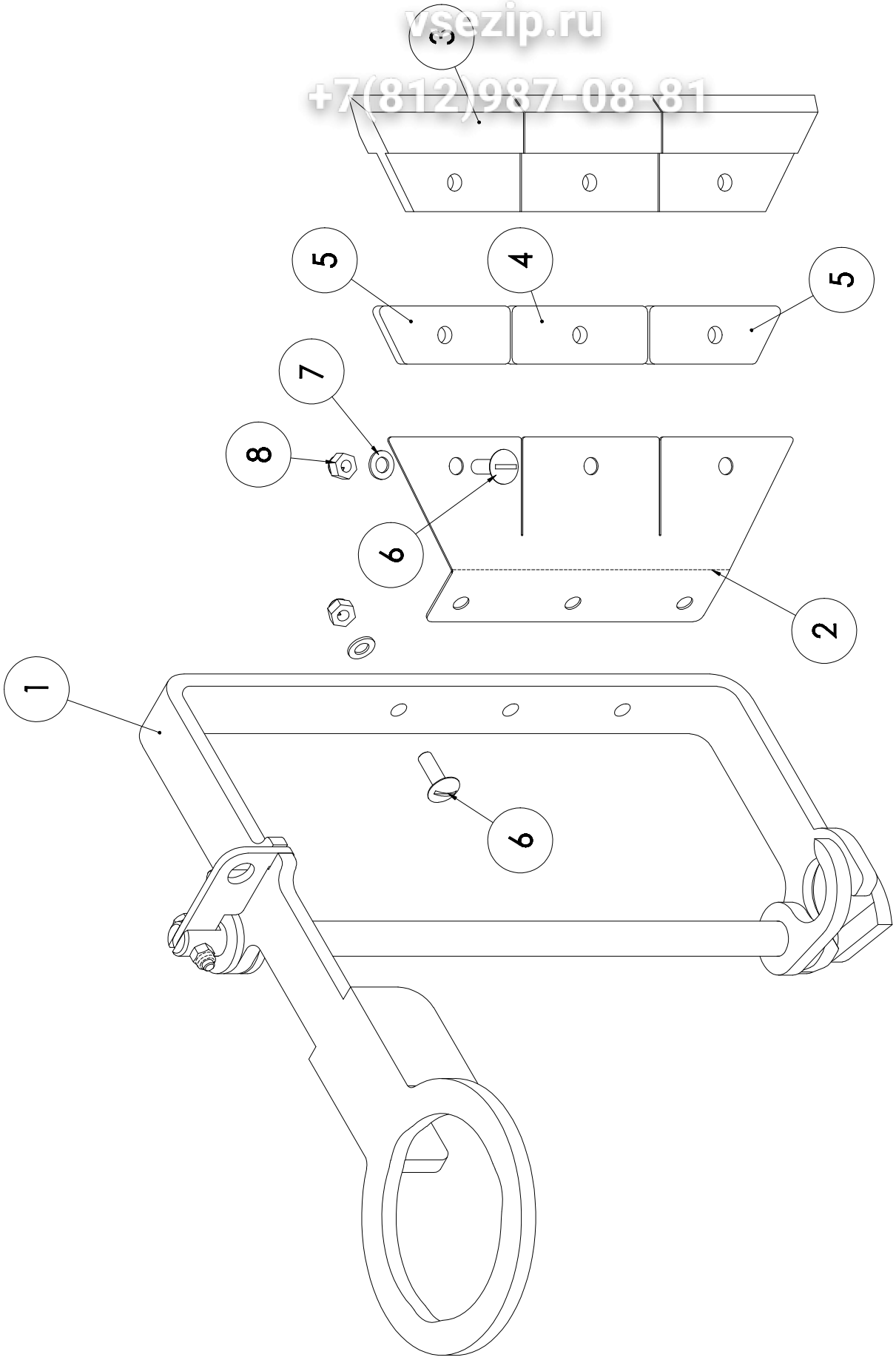

ЗиП Общепит
vsezip.ru
+7(812)987-08-81

Pos.	Model	UM	Qty	C	Model	Description	Price Eur
01		PZ	1,00		SH0302-00	ASS.SUPP.PALETTA VERT.MIX.HIGH-P070	
02		PZ	1,00	C	SH0304-00	PALETTA VERT.ACCIAIO ARM. HIGH-P070	
03		MT	0,21	C	10600160	TEFLON SCRAPER CUCIMIX (500MM)	
04		PZ	1,00		SH0306-00	RINF.CENTR.RASCH.(VERT.)HIGH-P070	
05		PZ	1,00		SH0308-00	RINF.LATER.RASCH.(VERT.)HIGH-P070	
06		PZ	1,00		10100002	SCREW POELIERS INOX M5X16	
07		PZ	1,00		10200105	PLANE WASHER A2 M5 UNI6592 DIN125	

ВИП Общепит
vsezip.ru
+7(812)987-08-81

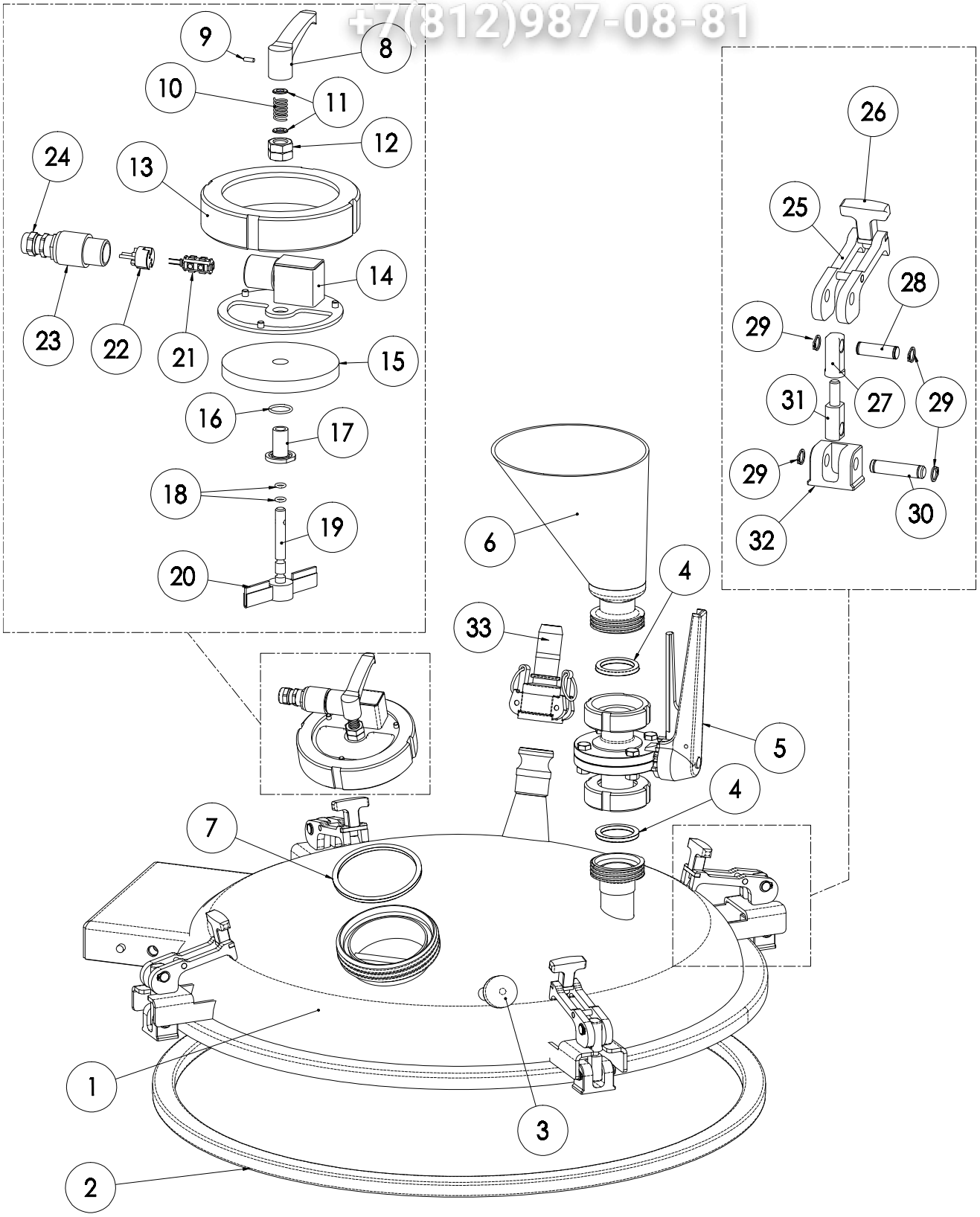

ЗИП Общепит
vsezip.ru
+7(812)987-08-81

Pos.	Model	UM	Qty	C	Model	Description	Price Eur
01	HIGH-P070	PZ	1,00		SH0050-00	LID HIGH-P070	
01	HIGH-P130	PZ	1,00		SH0450-00	ASS.COPERCHIO HIGH-P130	
02	HIGH-P070	PZ	1,00		10600290	AUTOCLAVE LID GASKET FOR KETT.D.600	
02	HIGH-P130	PZ	1,00		10600288	GUARNIZIONE COP.AUTOC.HIGH-P130	
03		PZ	1,00		20200098	COVER HANDLE PMK 120035	
04		PZ	1,00		10500069	BLUE GASKIT NBR DIN DN32	
05		PZ	1,00		30200250	RUBIN. DI SCAR.DN32 INOX A FARFALLA	
06		PZ	1,00		SH0090-00	ASS.TRAMOGGIA DI CARICO HIGH-P	
07		PZ	1,00		10500074	SILICONE GASKET DIN DN 80	
08		PZ	1,00		20200100	HANDLE L=63	
09		PZ	1,00		10100580	GRUB SCREW INOX M4X10 UNI5927	
10		PZ	1,00		20500017	INOX SPRING D.10X29,5	
11		PZ	1,00		10200230	PLANE WASHER A2 M8 UNI6592 DIN125	
12		PZ	1,00		10200094	NUT INOX A2 M12X1,5 UNI5589	
13		PZ	1,00		30200258	GIRELLA INOX DN80 DIN11851	
14		PZ	1,00		SH0092-00	BASE LAMP HOLDER OBLO' HIGH-P	
15		PZ	1,00		SH0096-00	VETRO OBLO' DIN8902 DE.93,5-DI.12,5	
16		PZ	1,00		10500095	O-RING DI.15,6X1,78 RIF.2062 EPDM	
17		PZ	1,00		SH0098-00	MANICOTTO X TERGIVETRO OBLO'HIGH-P	
18		PZ	1,00		10500096	O-RING DI.5,28X1,78 RIF.2021 EPDM	
19		PZ	1,00		SH0100-00	ASS.TERGIVETRI OBLO' HIGH-P	
20		PZ	1,00		SH0102-00	TERGIVETRO IN SILICONE 29X15 HIGH-P	
21		PZ	1,00	C	40200200	WARM WHITE LED LAMP G4 12V	
22		PZ	1,00	C	40200204	LED LAMPHOLDER G4	
23		PZ	1,00		SH0094-00	ASS.TAPPO PORTALAMPADA OBLO' HIGH-P	
24		PZ	1,00		10600104	PRESSACAVO PG9 IP68 OTTONE NICHEL.	
25		PZ	1,00		SH0116-00	CONTROL LEVER LOCKUP-LID HIGH-P070	
26		PZ	1,00		20200104	HANDLE T 40X30H M6	
27		PZ	1,00		SH0112-00	PART.SUP.REG.CHIUS.COPERC.HIGH-P070	
28		PZ	1,00		SH0114-00	PERNO D.10 LEVA CHIUS.COP.HIGH-P	
29		PZ	1,00		10500000	INOX RING SHAFT D.10 UNI7435	
30		PZ	1,00		SC1076-00	PERNO D.10 X LEVA MOLLA BIL.CBT/PR	
31		PZ	1,00		SH0110-00	PART.INF.REG.CHIUS.COPERC.HIGH-P070	
32		PZ	1,00		SH0108-00	BLOCK ROTATION LEVER LID HIGH-P070	
33		PZ	1,00		10400304	RACC.RAPIDO A LEVA VR C 1"(X TUBI)	

Вип Общепит
vsezip.ru
+7(812)987-08-81

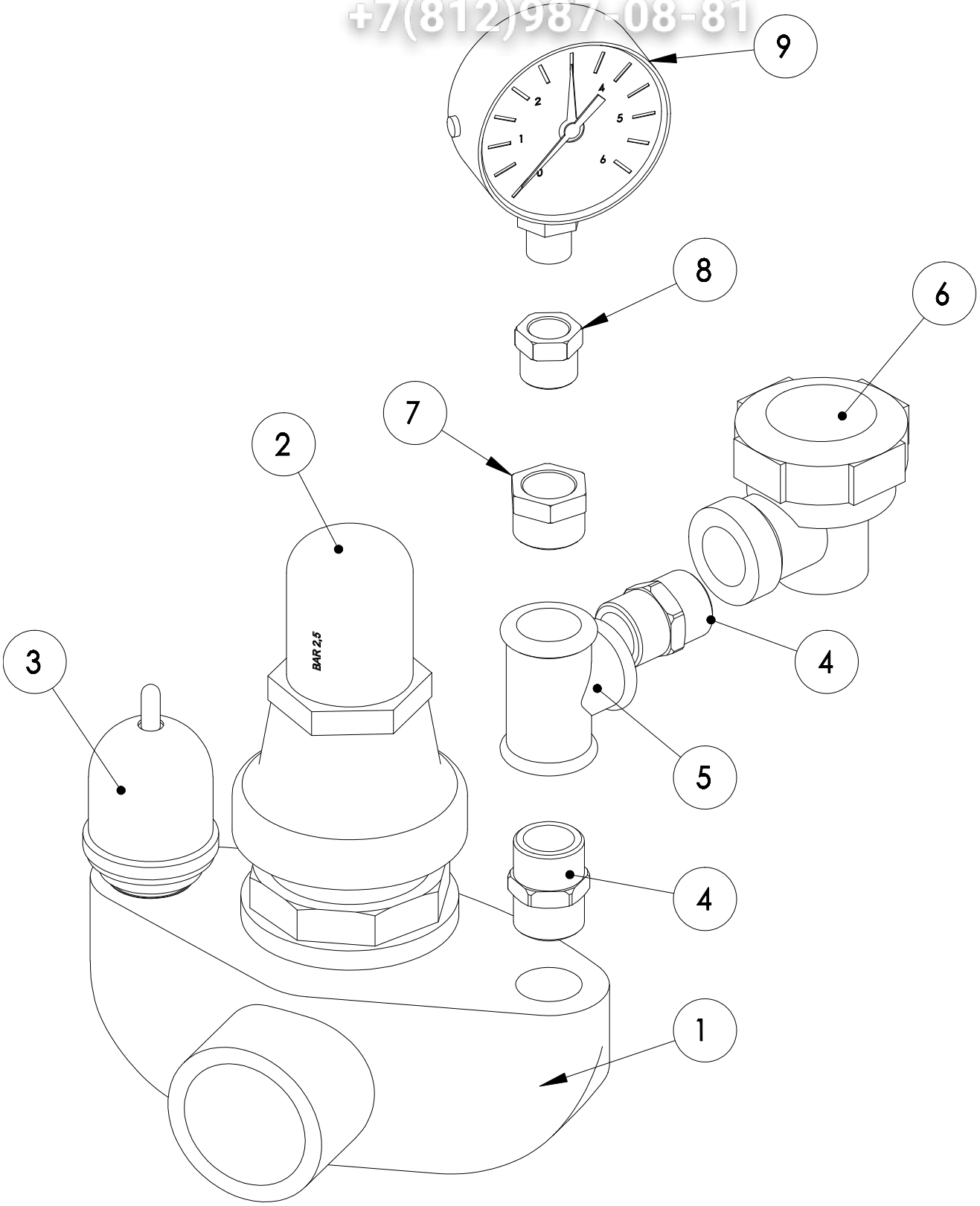

Зип Общепит
vsezip.ru
+7(812)987-08-81

Pos.	Model	UM	Qty	C	Model	Description	Price Eur
01		PZ	1,00		30300069	TUBE-SOCKET / PRESS.GAUGE 90° 1"1/4	
02		PZ	1,00		30300061	SAFETY VALVE 2,0 BAR 1 1/4"	
03		PZ	1,00		30300060	DEPRESSION VALVE 3/4"	
04		PZ	1,00		10400004	NIPPLE M-M 1/2"	
05		PZ	1,00		10400118	JUNCTION T F/F/F 1/2"	
06		PZ	1,00		30300040	STEAM TRAP 1/2" "E" BPT13AX	
07		PZ	1,00		10400056	REDUCTION 1/2"M-3/8"W (CHR.BRASS)	
08		PZ	1,00		10400052	REDUCTION 3/8"M-1/4"W (CHR.BRASS)	
09		PZ	1,00		30300027	PRESSURE GAUGE 0/6 BAR D.60 1/4"	