Зип Общепит
vsezip.ru
+7(812)987-08-81

10 GN 1/1 ELECTRIC CONVECTION / STEAM OVEN
FORNO CONVEZIONE / VAPORE ELETTRICO 10 GN 1/1

PNC	Model	Ref	Group	Level	Page	Notes
190ACR	FCZ101ETA	q1	FCZ	Touch	2…13	440V 3N 60Hz Marine
190AN4	**FCZ101EKA**	**r1**	**FCZ**	**Level K**	**2…13**	**400V 3N 50Hz**
236202	FCZ101EKA	T	FCZ	Level K	2…13	400V 3N 50Hz
236209	FCZ101EKAS	p1	FCZ	Level K	2…13	400V 3N 50Hz
236222	FCZ101EKN	U	FCZ	Level K	2…13	230V 3N
237202	FCZ101ETA	A	FCZ	Touch	2…13	400V 3N 50Hz
237212	FCZ101ETH	B	FCZ	Touch	2…13	400V 3N 50Hz P80
237222	FCZ101ETN	C	FCZ	Touch	2…13	230V 3N
237302	FCZ101ETK	h1	FCZ	Touch	2…13	400V 3N 50Hz
238202	FCZ101EBA2	D	FCZ	Level B	2…13	400V 3N 50Hz
238212	FCZ101EBH2	E	FCZ	Level B	2…13	400V 3N 50Hz P80
238222	FCZ101EBN2	F	FCZ	Level B	2…13	230V 3N
238232	FCZ101EBC2	G	FCZ	Level B	2…13	200V 3 60Hz Japan
238302	FCZ101EBK2	o1	FCZ	Level B	2…13	400V 3N UK
239202	FCZ101ECA2	H	FCZ	Level C	2…13	400V 3N 50Hz
239212	FCZ101ECH2	I	FCZ	Level C	2…13	400V 3N 50Hz P80
239222	FCZ101ECA2	L	FCZ	Level C	2…13	230V 3N
239342	FCZ101ECAS	g1	FCZ	Level C	2…13	400V 3N 50/60 Hz
266202	AOS101EKA1	Q	AOS	Level K	2…13	400V 3N 50Hz
266222	AOS101EKN1	R	AOS	Level K	2…13	230V 3N
266282	AOS101EKM1	S	AOS	Level K	2…13	208V 3 USA
266322	AOS101EKV1	f1	AOS	Level K	2…13	480V 3 60HZ USA
266352	AOS101EKR1	a1	AOS	Level K	2…13	400V 3N 50/60HZ AUS
267062	AOS101ETAS	a	AOS	Touch	2…13	400V 3N 50Hz
267072	AOS101EAQ1	O	AOS	Level A	2…13	Nando's
267202	AOS101ETA1	a	AOS	Touch	2…13	400V 3N 50Hz
267212	AOS101ETH1	b	AOS	Touch	2…13	400V 3N 50Hz P80
267222	AOS101ETN1	c	AOS	Touch	2…13	230V 3N
267232	AOS101ETC1	d	AOS	Touch	2…13	200V 3 60Hz Japan
267242	AOS101ETE1	e	AOS	Touch	2…13	440V 3 Marine
267252	AOS101ETF1	f	AOS	Touch	2…13	400V 3 Marine
267282	AOS101ETM1	h	AOS	Touch	2…13	208V 3 USA
267302	AOS101ETK1	l	AOS	Touch	2…13	400V 3N UK
267322	AOS101ETV1	i1	AOS	Touch	2…13	480V 3 USA
267352	AOS101ETR1	b1	AOS	Touch	2…13	400V 3N 50/60HZ AUS
268202	AOS101EBA2	n	AOS	Level B	2…13	400V 3N
268212	AOS101EBH2	o	AOS	Level B	2…13	400V 3N 50Hz P80

Зип Общепит
vsezip.ru
+7(812)987-08-81

10 GN 1/1 ELECTRIC CONVECTION / STEAM OVEN
FORNO CONVEZIONE / VAPORE ELETTRICO 10 GN 1/1

PNC	Model	Ref	Group	Level	Page	Notes
268222	AOS101EBN2	p	AOS	Level B	2…13	230V 3N
268232	AOS101EBC2	q	AOS	Level B	2…13	200V 3 60Hz Japan
268242	AOS101EBE2	r	AOS	Level B	2…13	440V 3 Marine
268252	AOS101EBF2	s	AOS	Level B	2…13	400V 3 Marine
268262	AOS101EB12	l1	AOS	Level B	2…13	480V 3 Marine
268302	AOS101EBH2	t	AOS	Level B	2…13	400V 3N UK
268352	AOS101EBR2	c1	AOS	Level B	2…13	400V 3N 50/60HZ AUS
269202	AOS101ECA2	u	AOS	Level C	2…13	400V 3N 50Hz
269212	AOS101ECH2	v	AOS	Level C	2…13	400V 3N 50Hz P80
269222	AOS101ECN2	z	AOS	Level C	2…13	230V 3N
269242	AOS101ECE2	m1	AOS	Level C	2…13	440V 3 50Hz Marine
269252	AOS101ECF2	n1	AOS	Level C	2…13	400V 3 50Hz Marine
269282	AOS101ECM1	P	AOS	Level C	2…13	208V 3 USA
269302	AOS101ECK2	M	AOS	Level C	2…13	400V 3N UK
269322	AOS101ECV1	e1	AOS	Level C	2…13	480V 3 60HZ USA
269332	AOS101ECY2	N	AOS	Level C	2…13	400V 30 Bakery
269352	AOS101ECR2	d1	AOS	Level C	2…13	400V 3N 50/60HZ AUS

Page	Index	Indice	Note
3	Oven cabinet and door	Cella forno e porta	
4	Water system	Impianto idraulico	
5	Boiler	Boiler	
6	Electrical components	Componenti elettrici	
7	Accessories	Accessori	
8...16	Spare parts list	Lista ricambi	
16	Maintenance kit	Kit di manutenzione	

Bold=last change / Grassetto =ultima modifica

Rev. 20

Brand/Marchio: All
Factory Code: 9PDD

Зип Общепит
vsezip.ru
+7(812)987-08-81

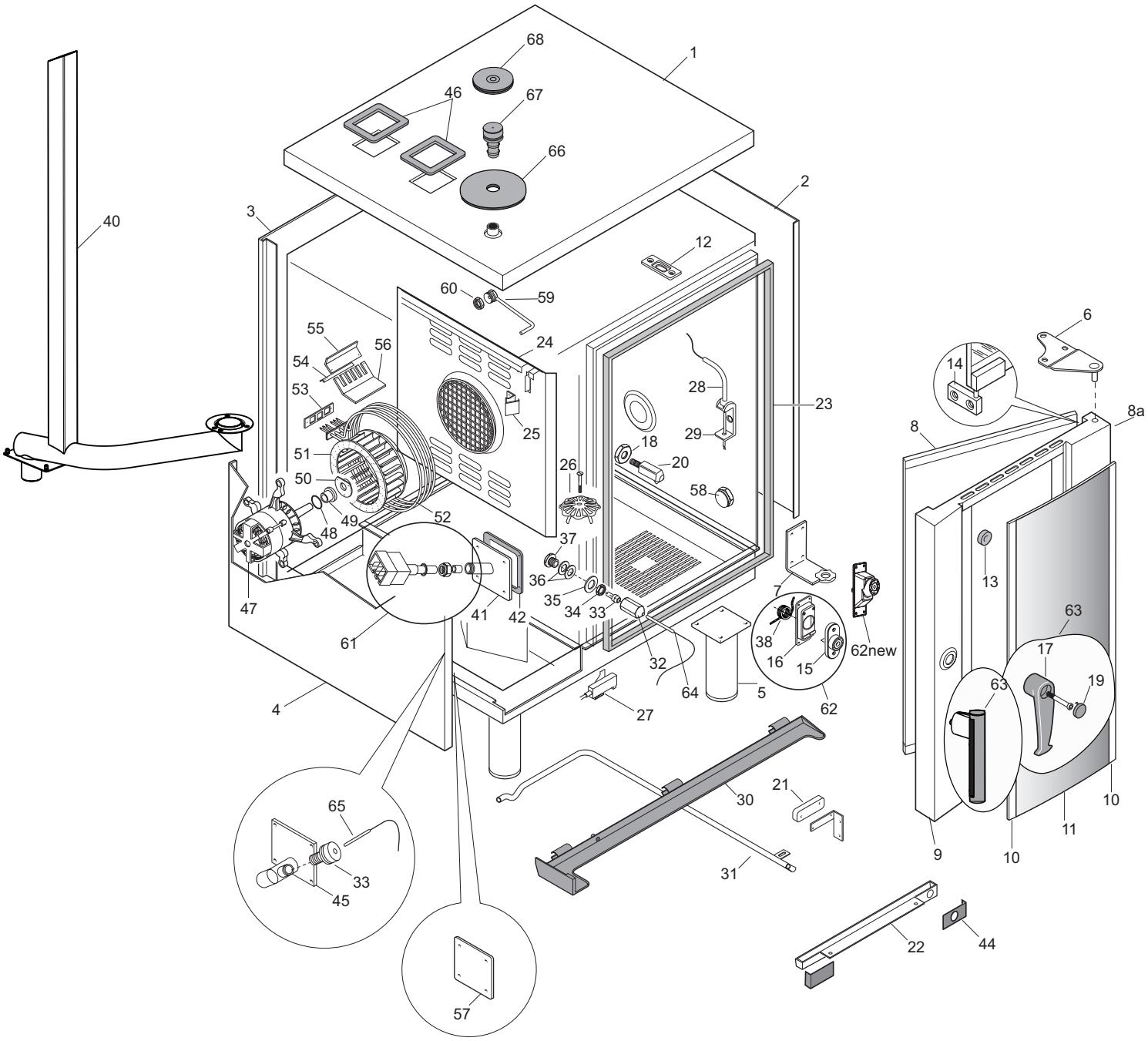

From Ser. Nr. Up to Ser. Nr.	Ed. 2019-08	Page: **3**	**Doc No: 875400V00**

Зип Общепит
vsezip.ru
+7(812)987-08-81

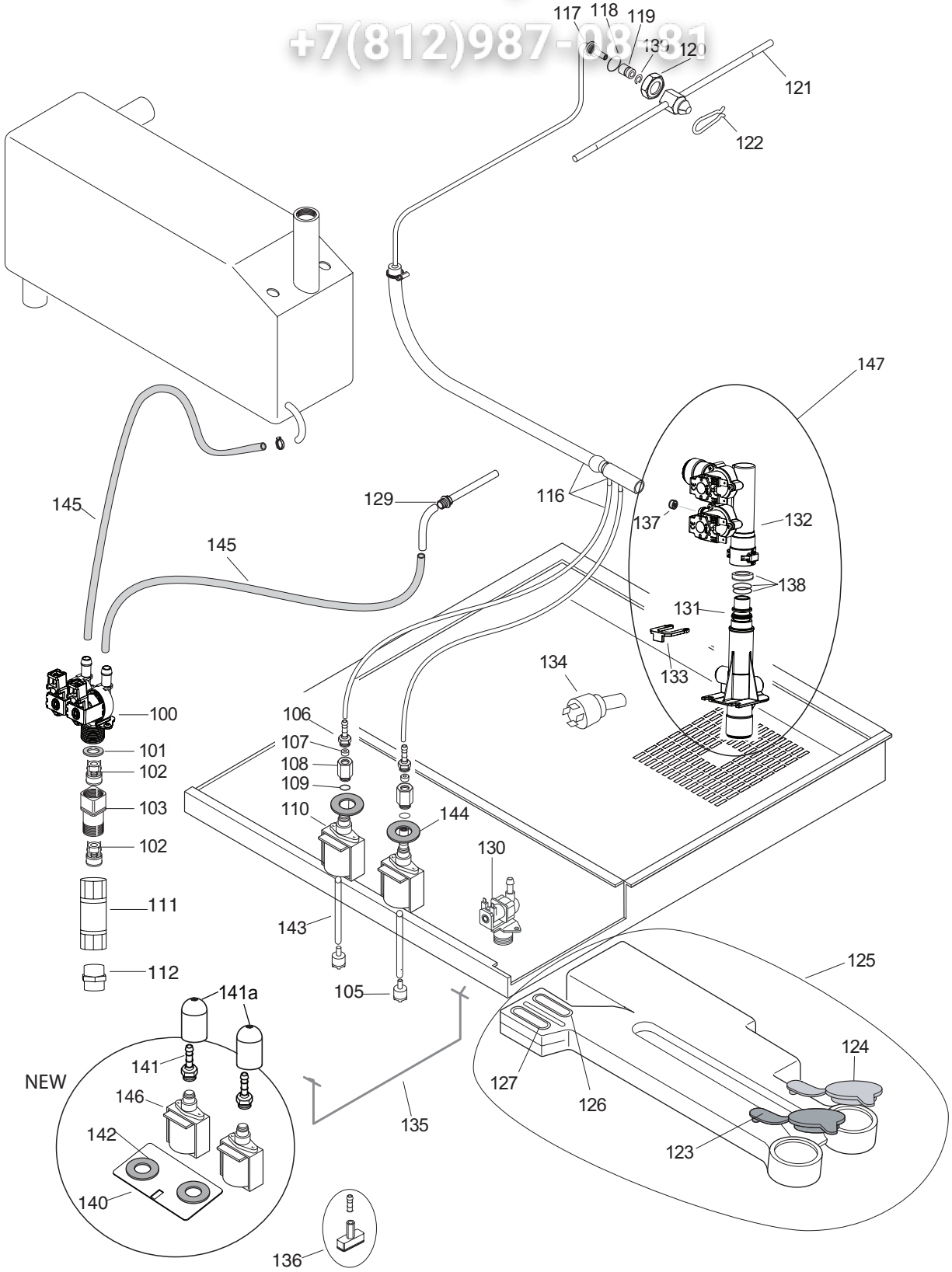

From Ser. Nr. Up to Ser. Nr.	Ed. 2019-08	Page: **4**	**Doc No: 875400V00**

Зип Общепит
vsezip.ru
+7(812)987-08-81

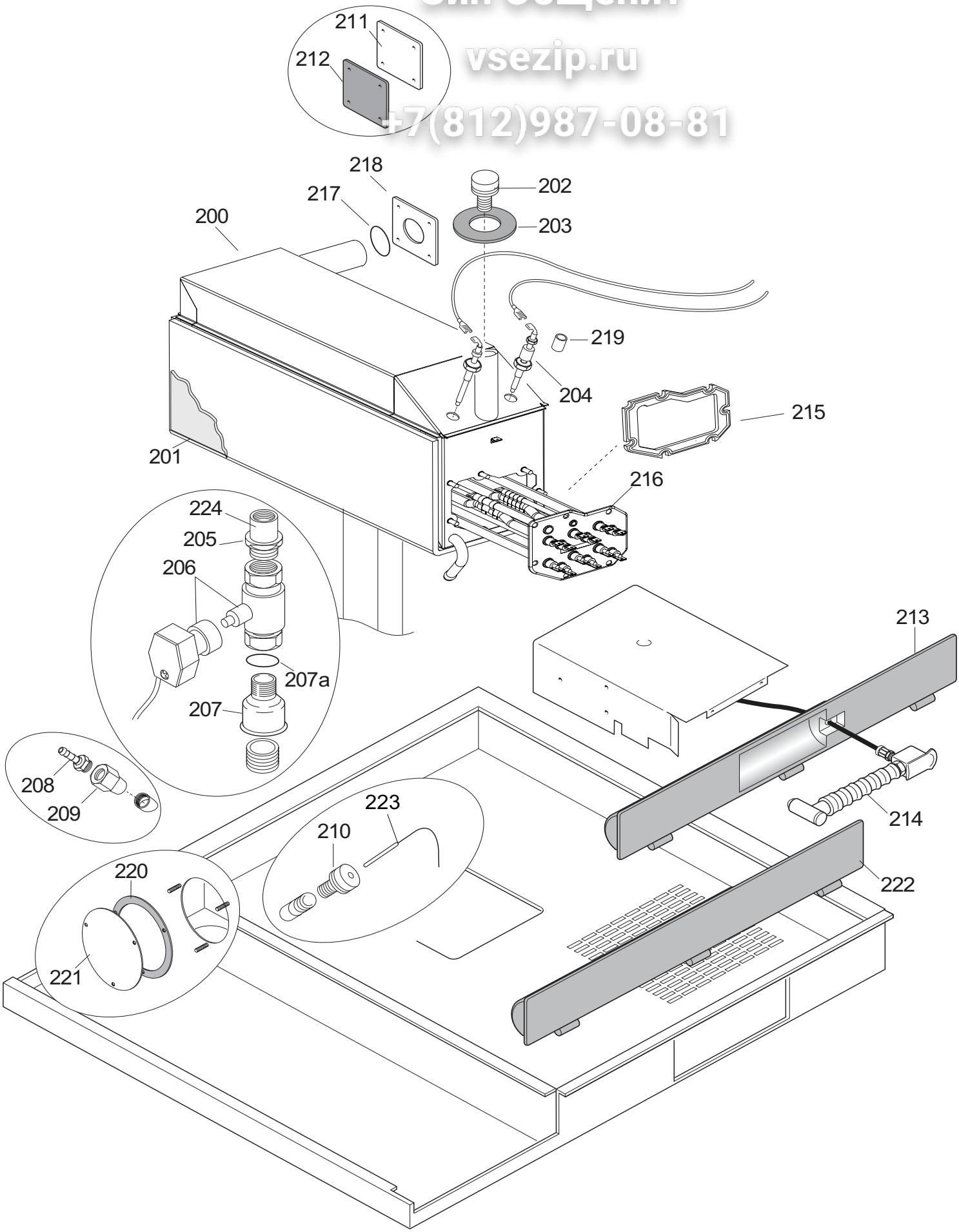

From Ser. Nr. Up to Ser. Nr.	Ed. 2019-08	Page: **5**	**Doc No: 875400V00**

Зип Общепит
vsezip.ru
+7(812)987-08-81

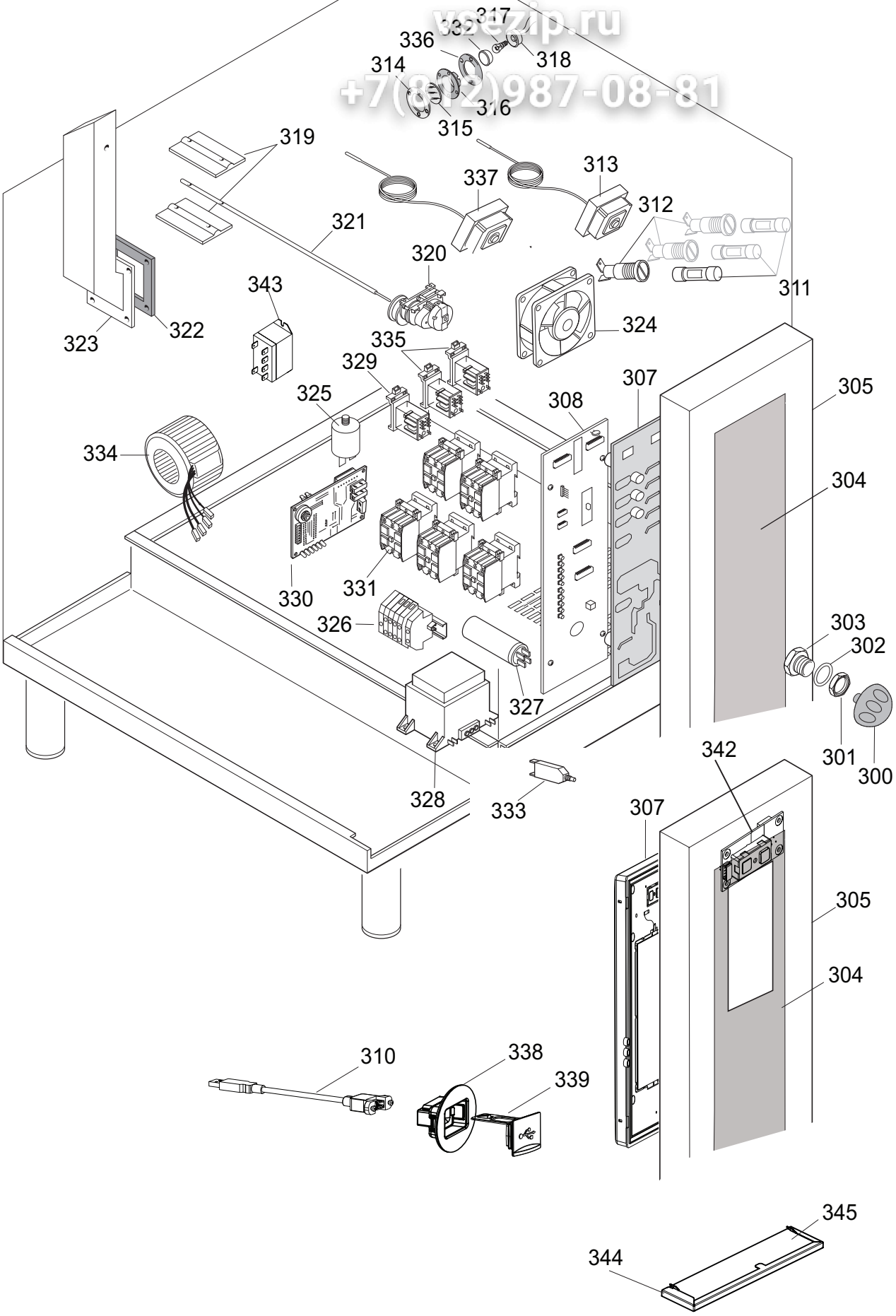

From Ser. Nr. Up to Ser. Nr.	Ed. 2019-08	Page: **6**	**Doc No: 875400V00**

Зип Общепит
vsezip.ru
+7(812)987-08-81

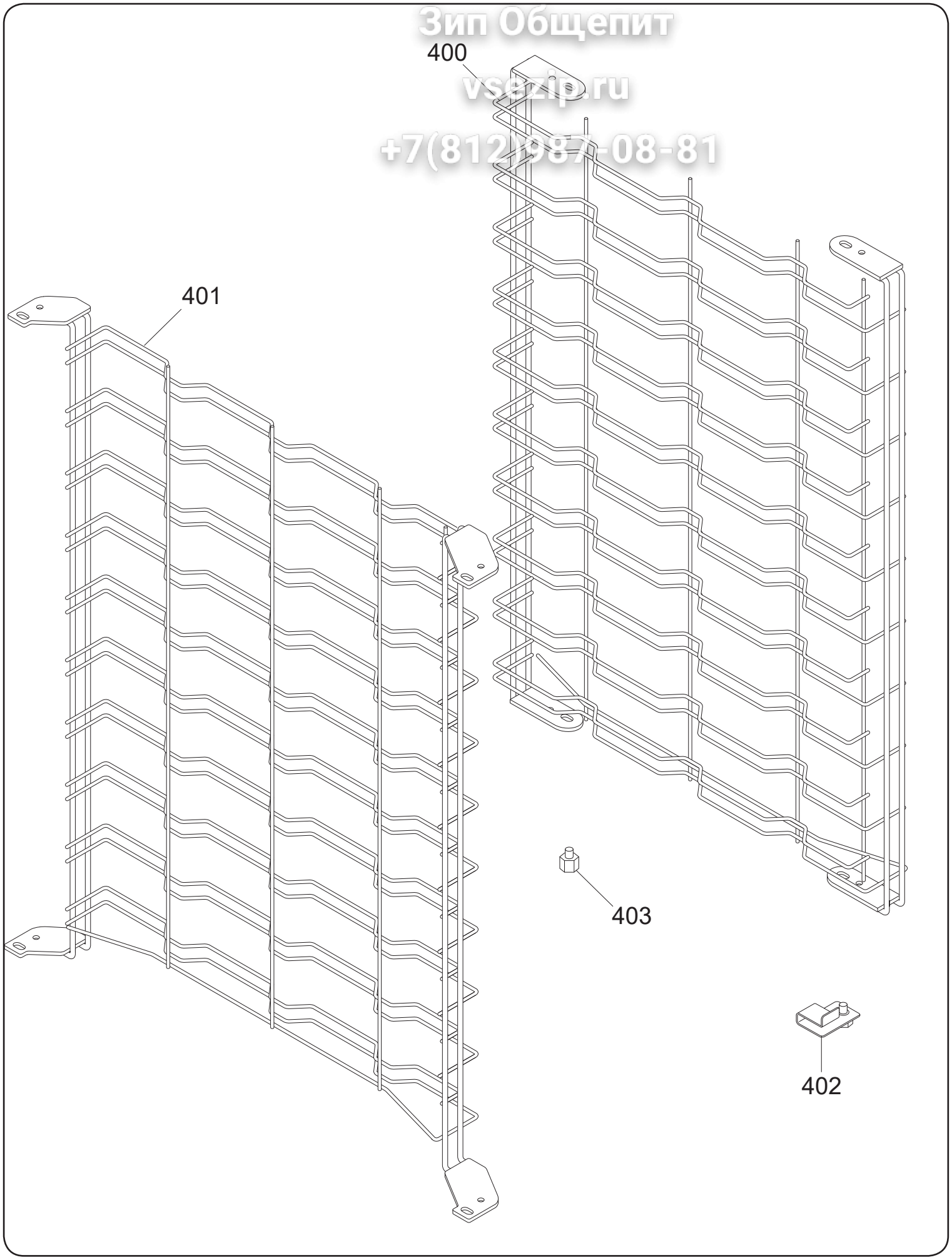

Зип Общепит
vsezip.ru
+7(812)987-08-81

Pos	Factory Code	Spare part code	Descrizione	Description	Ref./Notes
			Pagina 3	**Page 3**	
1	0590831300	0C6177	COPERCHIO	COVER	
2	0530890900	0C6174	FIANCO DX	RIGHT SIDE PANEL	
3	0530892700	0C6190	SCHIENALE	BACK PANEL	
3	0530893100	0C6194	SCHIENALE	BACK PANEL	for Marine models
4	0530893300	0C6196	FIANCO SX	LEFT SIDE PANEL	
5	0831850900	0C4892	PIEDINO Ø 58mm	FOOT Ø 58mm	From 2008/01 up to 2012/18
5	0831842202	0C4233	PIEDINO Ø 44 mm	FOOT Ø 44 mm	Up to 2007/52 from 2012/19
5	0806872300	0C4823	PIEDINO	FOOT	For Marine Version
6	0806847803	0C4234	CERNIERA SUPERIORE	UPPER HINGE	
7	0806861600	0C4235	CERNIERA INFERIORE	LOWER HINGE	
8	0873869902	0C4470	VETRO INTERNO	INNER GLASS	
*	0850400P00	0C6576	TELAIO PORTA	DOOR CHASSIS	
9	0879400504	0C6601	PORTA COMPLETA	COMPLETE DOOR	
9	0879400B04	0C6606	PORTA COMPLETA	COMPLETE DOOR	Marine Touch and B
10	0806859302	0C4476	PROFILO DX-SX	RIGHT AND LEFT TRIM	
11	0574400300	0C6559	VETRO ESTERNO	EXTERNAL GLASS	For AOS Version
11	0574818501	0C4943	VETRO ESTERNO	EXTERNAL GLASS	For FCZ Version
11	0574400P00	0C7972	VETRO ESTERNO	EXTERNAL GLASS	For Nando's Version
12	0543839700	0C4088	GUARNIZIONE SPILLONE	GASKET	
13	0543828001	006976	AMMORTIZZATORE	DAMPER	
14	0806822000	007007	CERNIERA VETRO INTERNO	HINGE, INNER GLASS	
15	0835871801	0C4089	GR.CHIUSURA A SCATTO 'HRS'	CLOSING MECHANISM	
16	0510824200	0C4237	SUPPORTO GR.CHIUSURA	SUPPORTO	
17	0548871501	0C4090	MANIGLIA CHIUSURA	DOOR HANDLE	
18	0516896400	0C4238	DADO FISSAGGIO	NUT FOR DOOR CATCHER	
19	0546822600	0C4091	TAPPO PER MANIGLIA 'HRS'	DOOR COVER HANDLE	For FCZ Version
19	0541400900	0C6545	TAPPO PER MANIGLIA NXT	DOOR COVER HANDLE	For AOS Version
20	0806859900	0C4092	NASELLO	DOOR CATCHER	
21	0699603700	049627	MAGNETE	MAGNET	
22	0528869501	0C4239	VASCHETTA RACC.CONDENSA	DOOR DRAIN TRAY	
23	0831846901	0C1477	GUARNIZIONE CELLA-PORTA	GASKET	
24	0830892205	0C4619	PARETE DI ASPIRAZIONE	SUCTION WALL	
25	0518807301	0C3423	MOLLA AGGANCIO PARETE	SPRING	
26	0518808600	0C1740	FILTRO FONDO	FILTER	
27	0654600000	049621	INTERRUTTORE MAGNETICO	MAGNETIC SWITCH	
28	0831831000	0C4240	SPILLONE CURVO MULTIPOINT	MEAT PROBE MULTI POINT	for Touch Level up to 7391
28	**0830407601**	**0CB214**	**SPILLONE CURVO MULTIPOINT**	**MEAT PROBE MULTI POINT**	**for Touch Level from 7401 + r1**

Зип Общепит
vseip.ru
+7(812)987-08-81

Pos	Factory Code	Spare part code	Descrizione	Description	Ref./Notes
28	0831830700	0C4241	SPILL. CURVO SINGOLO PUNTO	MEAT PROBE SINGLE POINT	for Level B,C,K up to 7391
28	0830407501	0CB213	SPILL. CURVO SINGOLO PUNTO	MEAT PROBE SINGLE POINT	for Level B,C,K from 7401
29	0527865201	0C1505	SUPPORTO SPILLONE	MEAT PROBE SUPPORT	Up to 7391
29	0506404T00	0CB144	SUPPORTO SPILLONE	MEAT PROBE SUPPORT	From 7401
30	0856814000	0C4242	BACINELLA SNODABILE	DRAIN TRAY	
31	0806858800	0C4243	TUBO PER CONDENSA 1/1	DRAIN TUBE	
32	0516855300	006991	DADO SONDA CELLA	NUT, CAVITY PROBE	
33	0543842600	0C4872	TAPPO PER SENSORE	STOPPER FOR SENSOR	
34	0214105101	020997	CONTRODADO PORTAUGELLO	LOCK NUT	
35	0516809301	002701	RONDELLA TENUTA SONDA	WASHER	
36	0543816300	002624	GUARNIZIONE PER SONDA	GASKET	
37	0516809400	002623	RACCORDO SONDA CELLA	CONNECTION, CAVITY PROBE	
38	0518818000	0C8561	MOLLA PER CHIUSURA	SPRING	
40	0856822203	0CB207	COLLETTORE DI SCARICO	DRAIN TUBE	For Level C
41	0806857201	0C4244	COND. FLANGIATO SONDA	FLANGE TUBE	For Level TOUCH
42	0543838300	0C4093	GUARNIZIONE BYPASS/LAMBDA	GASKET	
44	0543841300	0C4094	GUARN. VASC. COND. PORTA	GASKET	
45	0806873000	0C6351	CONDOTTO FLANGIATO BY-PASS	DUCT, BYPASS PROBE	For Level B, C,K
46	**0543828902**	**007005**	**GUARN. COND. ARIA-COPERCHIO**	**GASKET, DUCT**	
47	**0611806001**	**006998**	**MOTORE**	**MOTOR**	**For K, TOUCH, B, Marine up to 2015/47, C 400V Bakery NANDO'S**
47	**0611809000**	**0C5287**	**MOTORE**	**MOTOR**	**for Level C**
47	**0611807300**	**0C1474**	**MOTORE**	**MOTOR**	**for 208V 60 Hz**
47	**0611400100**	**0C6936**	**MOTORE**	**MOTOR**	**For Marine version from 2015/48 Touch 480V**
48	0543816700	002873	O RING	O RING	
49	0516808902	002699	CUSCINETTO	BEARING	
50	0538815400	0C4138	FLANGIA FISS.TENUTA MOTORE	FLANGE	
51	0835400800	-	VENTOLA	FAN	
52	0617826900	007066	RESISTENZA (5.6 kW/230V)	HEATING ELEM. (5.6 kW/230V)	For 230V Version
52	0617838900	0C6026	RESISTENZA (5.6 kW/200V)	HEATING ELEM. (5.6 kW/200V)	For 200V Version
52	0617823801	007064	RESISTENZA (5.6 kW/400V)	HEATING ELEM. (5.6 kW/400V)	for 400V models up to 138...
52	0617400801	0C6501	RESISTENZA (5.6 kW/400V)	HEATING ELEM. (5.6 kW/400V)	for 400V models from 139...
52	0617827000	0C1936	RESISTENZA (5,6 kW/440V)	HEATING ELEM. (5,6 kW/440V)	For 440V up to 115
52	0617400Q00	0C7059	RESISTENZA (5,6 kW/440V)	HEATING ELEM. (5,6 kW/440V)	For 440V from 116
52	0617829200	0C1396	RESISTENZA (5,5 kW/208V USA)	HEAT. ELEM. (5,5 kW/208V USA)	For 208V Version
52	0617829800	0C1500	RESISTENZA (5,5 kW/240 V USA)	HEAT. ELEM. (5,5 kW/240V USA)	For 240V Version

Зип Общепит
vsezip.ru
+7(812)987-08-81

Pos	Factory Code	Spare part code	Descrizione	Description	Ref./Notes
52	0617400400	0C6942	RESISTENZA (5,5 kW/480 V USA)	HEAT. ELEM. (5,5 kW/480V USA)	For 480V USA
52	0617400401	0CA330	RESISTENZA (5,5 kW/480 V USA)	HEAT. ELEM. (5,5 kW/480V USA)	For 480V marine
53	0543816501	002689	GUARNIZIONE RESIST. CELLA	GASKET, CAVITY HEATING EL.	
54	0503897402	006253	ANGOLARE RESISTENZE	SUPPORT	
55	0503891801	006256	LAMA FISSAGGIO RESISTENZE	SUPPORT	
56	0505404N00	0C3830	SUPPORTO RESISTENZE	SUPPORT	
57	0527898900	0C4857	PIASTRA CHIUSURA	FLANGE	for Level C,K
59	0856828400	0C4975	CONDOTTO UMIDIFICATORE	HUMIDIFIER PIPNG	for Level C,K
60	0516887101	0C6228	DADO CONDOTTO	NUT HUMIDIFIER	for Level C,K
61	*	0C6465	KIT SONDA LAMBDA	LAMBDA KIT	for level TOUCH
62	*	0CA757	KIT CHIUSURA PORTA	KIT CLOSING MECH.	Up to 6081…
62	835402M00	0CA733	ASSIEME CHIUSURA PORTA	COMPLETE CLOSING MECH.	From 6091…
63	0830400600	0C6572	MANIGLIA COMPLETA	COMPLETE DOOR HANDLE	for FCZ Group
63	0830400500	0C6569	MANIGLIA COMPLETA	COMPLETE DOOR HANDLE	for AOS Group
64	0830898902	0C6538	SENSORE TEMPERATURA	TEMP. PROBE	
65	0830899101	0C6539	SENSORE TEMPERATURA	TEMP. PROBE	
66	0543400900	0C7016	GUARNIZIONE PER TUBO	PIPE GASKET	
67	0543816601	002692	TAPPO CARICO DISINCROST.	RECHARGE CAP FOR SCALER	
68	0543843201	0C4965	GOMMINO CHIUSURA ING.DISIN	GASKET	
			Pagina 4	**Page 4**	
100	0696808300	0C5516	ELETTROVALVOLA 2 VIE	WATER VALVE 2 WAYS	for Level A,B
101	0543840600	0C4096	GUARNIZIONE FILTRO REFLEX	GASKET	for Level A,B
102	0549801800	0C2312	VALVOLA NON RITORNO	NOT RE-FLOW VALVE	for Level A,B
103	0516879400	0C2313	RACCORDO ENTRATA ACQUA	PIPE FITTING	for Level A,B
105	0831811400	0C1155	ASSIEME FILTRO	FILTER	
106	0516896101	0C4198	RACCORDO PORTAGOMMA	PIPE FITTING	
107	0544809000	0C1117	VALVOLA NON RITORNO	NOT RE-FLOW VALVE	
108	0516871900	0C1116	RACCORDO PER POMPA	CONNECTION, PUPM	
109	0543832300	0C1935	O-RING	O-RING	
110	0680801201	0C2341	POMPA	PUMP	for 50 Hz
-	-		KIT POMPA	PUMP KIT	for 50 Hz 0C2341+0C1116+ 0C1935
110	0680801301	0C2342	POMPA	PUMP	for 60 Hz
-	-	0C2309	TUBO POMPA - SERBATOIO	PUMP – TANK HOUSE	
111	**0652608800**	**0L2980**	**DOPPIA VALVOLA DI RITEGNO**	**DOUBLE CHECK VALVE**	**for AUS products**
112	**0511851200**	*	**GIUNTO M.3/4" - M.3/4"**	**COUPLING M.3/4"- M.3/4"**	**for AUS products**
116	0805400201	0C6202	ASSIEME COLL. LAVAGGIO	CONNECTION,C.S.	
117	0806871100	0C6031	ASS. SUPP. ATTACCO GETTO LAV.	SUPPORT	
118	0543841400	0C4201	GUARNIZIONE IN RAME	COPPER GARKET	
119	0516898301	0C4467	CUSCINETTO GETTO ROTANTE	BEARING	

Зип Общепит
vsezip.ru
+7(812)987-08-81

Pos	Factory Code	Spare part code	Descrizione	Description	Ref./Notes
120	0516896000	0C4202	DADO	NUT	
121	0806873900	0C5503	GETTO ROTANTE	ROTATING WASHING JET	
122	0518807100	007026	MOLLA	SPRING	
123	0544808100	0C1151	TAPPO PER SERBATOIO BLU	BLUE CUP	
124	0544808200	0C1152	TAPPO PER SERBATOIO ROSSO	RED CUP	
125	0544808001	0C4426	SERBATOIO DETERGENTE-BRIL	TANK	
126	0544808900	0C1154	PARATIA PER SERBATOIO ROSSO	RED BULKHEAD	
127	0544808400	0C1153	PARATIA PER SERBATOIO BLU	BLUE BULKHEAD	
129	0H22982600	007012	TUBO UMIDIFICATORE	HUMIDIFIER PIPE	for Level A, B
129	0856828600	0C4977	TUBO UMIDIFICATORE	HUMIDIFIER PIPE	for Level C,K
130	0696808200	0C5515	ELETTROVALVOLA	WATER VALVE	for Level C,K
131	0831857200	0C6370	ASSIEME COLLETTORE LAV.	CONNECTION,C.S.	
132	0696808600	0C6374	GRUPPO VALVOLE CLEANYNG	VALVE GROUP C.S.	Level TOUCH, B not for 60Hz
132	0696400100	0C6373	GRUPPO VALVOLE CLEANYNG	VALVE GROUP C.S.	for 60 Hz Version
132	0696400300	0C6406	GRUPPO VALVOLE CLEANYNG	VALVE GROUP C.S.	for Level C,K
133	0546825100	0C6222	FORCELLA SICUREZZA	CLIP	
134	0646817201	0C6217	PRESSOSTATO ATTACCO RAPID	WATER PRESSURE SWITCH	
135	0513805000	0C5426	STAFFA SUPPORTO SERBATOIO	SUPPORT PLATE	
136	-	0C6467	KIT SUPPORTO SERBATOIO	KIT TANK SUPPORT	(0C6199+0C6201+ 0C6466
137	-	0C6375	KIT RIDUTTORI	FLOW REDUCER KIT	
138	-	0C6377	KIT O-RING +BUSSOLA	O-RING +BUSH KIT	
139	0219035015	0C6421	ANELLO ELASTICO	ELASTIC RING	
140	0505401R00	0C7924	PIASTRINA FISSAGGIO POMPE	FIXING PLAQUE	
141	0544400C01	0C8348	PORTAGOMMA Ø5-1/8' CON OR	RUBBER HOLDER	Up to 5151…
141	0544400C02	0CA348	PORTAGOMMA Ø5-1/8' CON OR	RUBBER HOLDER	From 5161…
141a	0546400J00	0C9538	CAPPUCCIO DI PROT.	PROTECTION CAP	
142	0543400R00	0C7925	PASSACAVO	WIRING BUSH	
143	0546814600	0C2309	TUBO EXT	EXT. PIPE	
144	0246530100	005382	GOMMINO	GASKET	
145	0544819400	0C5829	TUBO EPDM BLU	EPDM PIPE	
146	0686400100	0C8347	POMPA DEFOND PHOENIX	PHOENIX DEFOND PUMP	Up to 4441…
146	0686400201	0CA112	POMPA CEME	CEME PUMP	From 4451…
147	**0835400L00**	**0C8683**	**GRUPPO ENTRATA ACQUA**	**GROUP WATER INLET**	**Level Touch, K, B**
147	**0835400M00**	**0C8684**	**GRUPPO ENTRATA ACQUA**	**GROUP WATER INLET**	**Level C**
			Pagina 5	**Page 5**	
200	0878401100	0C9662	KIT ASSIEME BOILER	BOILER ASS.Y KIT	
200	0878401000	-	KIT ASSIEME BOILER	BOILER ASS.Y KIT	h1
201	0569806900	0C5836	KIT ISOLAMENTO	KIT INSULATION	
202	0543816601	002692	TAPPO	STOPPER	

Зип Общепит
vsezip.ru
+7(812)987-08-81

Pos	Factory Code	Spare part code	Descrizione	Description	Ref./Notes
203	0543400900	0C7016	GUARNIZIONE RES. BOILER	GASKET HEAT BOILER	
204	0830890500	007033	SONDA DI LIVELLO	LEVEL PROBE	
205	0516809501	007117	RACCORDO	CONNECTION	
206	0689400000	0CB250	VALVOLA DI SCARICO 230V	DRAIN VALVE 230V	for TOUCH and B
206	0689400500	0CB251	VALVOLA DI SCARICO 240V	DRAIN VALVE 240V	for TOUCH USA
207	0511820300	0C3847	MANICOTTO 1"-3/4"	CONNECTION 1"-3/4"	
207a	0543816800	002874	O-RING	SEALING RING	
208	0510828000	0C5564	RESCA D12 FILETT 1/4' GAS	PIPE CONNECTION	
209	0516879600	0C4099	UGELLO 'ELPIS'1/4'FD3.5-3/8'M	NOZZLE	
210	0543842600	0C4872	TAPPO PER SENSORE	STOPPER FOR SENSOR	
211	0527898700	0C4856	FLANGIA CHIUS. FORO BOILER	FLANGE	For Level C,K
212	0543842800	0C4963	GUARN. CHIUSURA FORO BOILER	GASKET	For Level C,K
213	0546815103	0C4532	PANNELLO FRONTALE INFERIORE	PANEL	
214	0873881203	0C4248	DOCCETTA	SHOWER	up to 5201…
214	0875402G01	0CA407	DOCCETTA	SHOWER	for I and h1 from 5211...
215	0543844800	0C5834	GUARNIZIONE	GASKET	
216	0617836402	0C5840	RES. BOILER (17 kW/400V)	HEAT. EL. BOILER (17 kW/400V)	For 400V Version
216	0617836900	0C6024	RESI. BOILER (17 kW/200V)	HEAT. EL. BOILER (17 kW/200V)	For 200V Version
216	0617844800	0C5843	RESIST. BOILER (17 kW/230V)	HEAT. EL. BOILER (17kW/230V)	For 230V Version
216	0617838302	0C5846	RESIST. BOILER (17 kW/440V)	HEAT. EL. BOILER (17 kW/440V)	For 440V Version
216	0617837100	0C5821	RESIST. BOILER (17 kW/208V USA)	HEAT. EL. BOIL. 17 kW/208V USA	For 208V Version
216	0617837700	0C5824	RESIST. BOILER (17 kW/240V USA)	HEAT. EL. BOIL. 17 kW/240V USA	For 240V Version
216	0617400100	0C6939	RESIST. BOILER (17 kW/480V USA)	HEAT. EL. BOIL. 17 kW/480V USA	For 480V Version
217	0543816800	002874	OR BOILER	OR BOILER	
218	0527898600	0C4821	FLANGIA BOILER	FLANGE	
219	0515857001	055347	DISTANZIALE PER SONDA L=9	SPACER	
220	0543400000	0C7033	GUARNIZIONE PORTELLO	GASKET	for level TOUCH
221	0J89061403	0C3443	PORTELLO ISPEZIONE	INSPECTION COVER	
222	0546821401	0C8597	PANNELLO FRONTALE INFERIORE	PANEL	For Level B
223	0830899101	0C6539	SONDA BYPASS 1100 BIANCO	BYPASS PROBE 1100mm WHITE	for TOUCH and B
224	0544820101	0C5283	TUBO FLESSIBILE BOILER	BOILER HOSE	
			Pagina 6	**Page 6**	
300	0806874001	0C5600	MANOPOLA	HANDLE	For level B,C,K
301	0214114900	051263	CONTRODADO	LOCK NUT	For level B,C,K
302	0508836400	002727	RONDELLA	DISK	For level B,C,K
303	0516807301	002662	BOCCOLA	BUSH	For level B,C,K
304	0548400500	0C6549	MEMBRANA TOUCH	LAYER LEV. TOUCH	for TOUCH AOS
304	0548400B00	0C6551	MEMBRANA TOUCH	LAYER LEV. TOUCH	for TOUCH FCZ
304	0548400F00	0C6553	MEMBRANA LIV.B	LAYER LEV. B	for Level B AOS
304	0675855002	0C4948	MEMBRANA LIV.B	LAYER LEV. B	for Level B FCZ

Зип Общепит
vsezip.ru
+7(812)987-08-81

Pos	Factory Code	Spare part code	Descrizione	Description	Ref./Notes
304	0548400J00	0C6556	MEMBRANA LIV.C	LAYER LEV. C	for Level C AOS
304	0675855103	0C4949	MEMBRANA LIV.C	LAYER LEV. C	for Level C FCZ
304	0548401900	0C8084	MEMBRANA LIV.C BAKERY	LAYER LEV. C BAKERY	for Level C Bakery
304	0675847601	0C7961	MEMBRANA NANDO'S	LAYER NANDO'S	for Nando's Model
304	0548401G00	0C8706	MEMBRANA LIV. TOUCH "K"	LAYER TOUCH "K"AOS MODELS	For Touch "K" AOS
305	0870400501	0C6582	CRUSCOTTO TOUCH (NO MEMBR.)	CONT.PANEL TOUCH (NO LAYER)	for TOUCH AOS
305	0870400J00	0C6592	CRUSCOTTO TOUCH (NO MEMBR.)	CONT.PANEL TOUCH (NO LAYER)	for TOUCH FCZ
305	0870400600	0C6583	CRUSCOTTO LIV. B (NO MEMBR.)	CONT.PANEL LEV. B (NO LAYER)	for Level B AOS
305	0873896002	0C4902	CRUSCOTTO LIV. B (NO MEMBR.)	CONT.PANEL LEV. B (NO LAYER)	for Level B FCZ
305	0870400K00	0C6593	CRUSCOTTO LIV. C (NO MEMBR.)	CONT.PANEL LEV. C (NO LAYER)	for Level C AOS
305	0873896102	0C4903	CRUSCOTTO LIV. C (NO MEMBR.)	CONT.PANEL LEV. C (NO LAYER)	for Level C FCZ
305	0873895902	0C4901	CRUSCOTTO NANDO'S	CONT.PANEL NANDO'S	For Nando's Model
305	0875401U00	0C8711	CRUSCOTTO TOUCH K CON MEMBRANA	CONT. PANEL TOUCH K WITH LAYER	For Touch K AOS
307	675400A00	0C6571	SCHEDA USER INTERFACE LIV. TOUCH	USER INTERF. BOARD, LEV. TOUCH	for Level TOUCH,K up to 2441…
307	675400P01	0C8805	SCHEDA USER INTERFACE LIV. TOUCH	USER INTERF. BOARD, LEV. TOUCH	for Level TOUCH,K from 2451… up to 4481…
307	0675403100	0CB664	USER INTERFACE TOUCH	USER INTERF. BOARD, TOUCH	for Level TOUCH,K from 4491
307	0675838802	0C0041	SCHEDA USER INTERFACE LIV. B	USER INTERF. BOARD, LEV. B	for Level B
307	0675854600	0C4891	SCHEDA USER INTERFACE LIV. C	USER INTERF. BOARD, LEV. C	for Level C
307	0675854602	0C7350	SCHEDA USER INTERFACE LIV.C (1/2 VEL)	USER INTERF. BOARD,LEV. C (1/2 SPEED)	for level C (start s/n 120…)
307	0675847701	0C3915	SCHEDA USER INTERFACE NANDO'S	USER INTERFACE NANDO'S	for Nando's model up to 114…
307	0675837904	0C0043	SCHEDA USER INTERFACE NANDO'S	USER INTERFACE NANDO'S	for Nando's model from 115..
308	**673400600**	**0CB546**	**SCHEDA POWER**	**MAIN POWER**	**Level TOUCH,K**
308	**673400500**	**0CB545**	**SCHEDA POWER**	**MAIN POWER**	**Level B**
308	**673400800**	**0CB545**	**SCHEDA POWER**	**MAIN POWER**	**Lev. C 230-400V**
308	**673400700**	**0CB545**	**SCHEDA POWER**	**MAIN POWER**	**Lev. C 208-480V, BAKERY**
-	0546814001	0C3750	DISTANZIALE ARCHETTO NYLON	SPACER NYLON	for Level B, C ,K
-	0633847400	0C6564	CABLAGGIO USER - POWER	MAIN - USER CABLE	for TOUCH level
310	0638400Y00	0C6566	CAVO PROLUNGA USB	USB CABLE	for TOUCH level
-	0638400P00	0C6565	CAVO ALIMENTAZIONE USER	SUPPLY CABLE USER	for TOUCH level
311	0652803300	0C1480	FUSIBILE OMEGA 5X20 6,3A T	FUSE OMEGA 5X20 6,3A T	
311	0652806100	0C4996	FUSIBILE 5X20 3.15A T	FUSE 5X20 3.15A T	For E,F1
311	0652800901	058871	FUSIBILE RAPIDO 6.30 A	FUSE FAST 6.3 A	For 400V; 230V
311	0652803900	0C2301	FUSIBILE OMEGA 800MA	FUSE OMEGA 800MA	For 400V; 230V
311	0652803100	0C6034	FUSIBILE 1,6A OMEGA	FUSE 1,6A OMEGA	For 200V
311	0652805200	0C2236	FUSIBILE 1,6A WEBER	FUSE 1,6A WEBER	For 200V
311	0652804900	0C3650	FUSIBILE 3,15A	FUSE 3,15A	For Marine Version

Зип Общепит
vsezip.ru
+7(812)987-08-81

Pos	Factory Code	Spare part code	Descrizione	Description	Ref./Notes
311	0652805100	0C2230	FUSIBILE RAPIDO 6.30 x3.2A	FUSE FAST 6.3 x 3.2A	For Marine Version
311	0652803300	0C1480	FUSIBILE OMEGA 5X20 6,3A T	FUSE OMEGA 5X20 6,3A T	For 208,240,480V
311	0652400000	0C6946	FUSIBILE 3,15A T	FUSE 3,15 A T	For 480V
312	0805408Q00	0CB128	PORTAFUSIBILE	FUSE HOLDER	For 400V; 230V
312	0805408R00	0CB130	PORTAFUSIBILE	FUSE HOLDER	For Marine Version
313	0646812200	007042	LIMITATORE, CELLA	LIMITER, CAVITY	
313	0646810802	006314	LIMITATORE, CELLA	LIMITER, CAVITY	for USA and I1
314	0508840801	002628	FLANGIA	FLANGE	
315	0574804900	002627	VETRO	GLASS	
316	0543817202	002626	GUARNIZIONE	GASKET	
317	**0660400200**	**0CB661**	**LAMPADA ALOGENA**	**HALOGEN LAMP**	
318	0660806401	007055	PORTALAMPADA	LAMP HOLDER	
319	0508896801	007081	FARFALLA	CLOSER	
320	0680802300	0C5501	MOTORIDUTTORE	MOTOREDUCER	Up to 219…
320	0680400100	0C8687	MOTORIDUTTORE	MOTOREDUCER	From 220…
320	0680802400	0C5502	MOTORIDUTTORE	MOTOREDUCER	Up to 244... for USA models
320	0680802B00	0C8695	MOTORIDUTTORE	MOTOREDUCER	From 245... for USA and I1
321	0856832702	0C5525	ASTA	SHAFT	
322	**0543828600**	**007053**	**GUARNIZIONE**	**GASKET**	
323	0831855200	0C5528	CONDOTTO ARIA	DUCT, AIR	
324	0682400700	0CB143	VENTILATORE	FAN	
325	0694605400	049303	FILTRO ANTIDISTURBO	FILTER	not for Marine and USA
326	0639808600	0F0112	MORSETTIERA	TERMINAL BOARD	
326	0639813100	0C6028	MORSETTIERA	TERMINAL BOARD	For 200V Version
327	0694604400	047541	CONDENSATORE 12.5 Mf	CAPACITOR 12.5 MF	Level K, Touch, A e B not for USA models
327	0694806000	0C5526	CONDENSATORE DA 8 MF	CAPACITOR 8 MF	for Level C – not marine and USA models
328	0624400100	0C6895	TRASFORMATORE	TRANSFORMER	Up to 3291 except for Japan, USA and Marine models
328	0624400900	0C9557	TRASFORMATORE	TRANSFORMER	From 3301 except for Japan, USA and Marine models
328	0624807100	007046	TRASFORMATORE	TRANSFORMER	For Japan models
328	0624807700	0C0949	TRASFORMATORE	TRANSFORMER	for Marine models except for I1
329	0648803001	058857	RELE	RELE	
329	0648722900	088267	RELE	RELE	For 60Hz Version

Зип Общепит
vsezip.ru
+7(812)987-08-81

Pos	Factory Code	Spare part code	Descrizione	Description	Ref./Notes
330	0624807002	007047	ALIMENTATORE SWITCHING	SWITCHING FEEDER	
331	0648807300	088477	CONTATTORE K3-10A	CONTACTOR K3-10A	Level A, B, Touch: - 400V - 400V/440V/480V Marine - 480V USA
331	0648807400	006879	CONTATTORE K3-18A	CONTACTOR K3-18A	- 400V - 230V - 400V/440V Marine - 208V USA
331	0648807700	007080	CONTATTORE K3-32A00	CONTACTOR K3-32A00	- 230V - 208V USA - 480V USA
331	0648613200	0L0355	CONTATTORE K3-24A00	CONTACTOR K3-24A00	Level B and Touch: - Japan - 480V Marine
331	0648400000	088557	CONTATTORE K1-09D10	CONTACTOR K1-09D10	Only Elux: - 400V/440V Marine - 480V USA
332	0509803900	0C4459	RIFLETTORE	REFLECTOR	
333	0648805200	0F0045	INT MAGNETO TERMICO	MAGN. THERM. SWITCH	For Marine Version
334	0624400002	0C6945	TRASFORMATORE	TRANSFORMER	For USA models and I1
335	0648802601	056466	RELE	RELE	For 60Hz Version
336	0543843500	0C5451	GUARNIZIONE	GASKET	
337	0646814900	0C2983	LIMITATORE, BOILER	LIMITATORE, BOILER	for Level TOUCH e B except for USA and I1
337	0646810902	006433	LIMITATORE, BOILER	LIMITATORE, BOILER	USA (touch and B) and I1
338	0546400200	0C6547	VASCHETTA USB	USB PLUG	for TOUCH level
339	0541400A00	0C6546	COPERTURA USB	USB COVER	for TOUCH level
342	0675858601	0C8033	TASTO ON-OFF(INTER.PRINC)	ON-OFF(MAIN SWITCH)	
343	0648722900	088267	RELE' SICUREZZA	SECURITY RELE	For TOUCH level
344	0831851002	0C4934	ASSIEME FILTRO CRUSCOTTO	ASS. FILTER CONTROL PANEL	Except for p1
345	0549400J00	*	FILTRO CRUSCOTTO	FILTER CONTROL PANEL	
			Pagina 7	**Page 7**	
400	0831849200	0C4862	PORTATEGLIE DX P60	TRAY SUPPORT DX P60	For P 60 Version
400	**0831852200**	**0C5013**	**PORTATEGLIE DX P80**	**TRAY SUPPORT DX P80**	**For P 80 Version**
401	0831848900	0C4861	PORTATEGLIE SX P60	TRAY SUPPORT SX P60	For P 60 Version
401	**0831852100**	**0C5012**	**PORTATEGLIE SX P80**	**TRAY SUPPORT SX P80**	**For P 80 Version**
402	0806872800	0C4961	SUPPORTO CON S.G.	SUPPORT S.G.	
403	0511828100	0C5620	SUPPORTO	SUPPORT	
*	0527839102	0C1567	ELEM. DX PER STRUTTURA	DX ELEMENT	For Marine Version
*	0527839202	0C1568	ELEM. SX PER STRUTTURA	SX ELEMENT	For Marine Version

10 GN 1/1 ELECTRIC CONVECTION / STEAMER OVEN
FORNO CONVEZIONE / VAPORE ELETTRICO 10 GN 1/1

Зип Общепит
vsezip.ru
+7 (812) 987-08-81

Pos	Factory Code	Spare part code	Descrizione	Description	Ref./Notes
*	0853852705	0C3458	ASS.STR. PORTATEGLIE	TRAY SUPPORT	For Marine Version
*	*	0CA303	KIT GUARNIZIONI FORNO	OVEN GASKET KIT	For Touch, Level A and Level B (12+42+48+49+ +53+207a+217+ 316+319+322+336)
*		0C9499	KIT SCARICO	DRAIN KIT PIPE	
			SONDE DI TEMPERATURA	**TEMPERATURE PROBES**	
	0830400N00	0C7028	SONDA CELLA 500mm ROSSA	CAVITY PROBE 500mm RED	
	0830899001	0C0325	SONDA BOILER 800mm AZZURRA	BOILER PROBE 800mm BLUE	for TOUCH and B
	0830899101	0C6539	SONDA BYPASS 1100 BIANCO	BYPASS PROBE 1100mm WHITE	for TOUCH and B
*	*	0CB442	KIT MANUTENZIONE SEMESTRALE FORNI ELETTRICI 10 1/1	BIANNUAL MAINTENANCE KIT OVEN - ELECTRIC 10 1/1	12+23+42+53+ 215+2x316+ 2x317+2x336+ 0CA120+0Q0006+ 0C9992
*	*	0CB443	KIT MANUTENZIONE ANNUALE FORNI ELETTRICI 10 1/1	YEARLY MAINTENANCE KIT OVEN - ELECTRIC 10 1/1	12+23+42+48+ 49+53+207a+215+ 2x316+2x317+ 2x336+0CA120+ 0Q0006+0C9992